REV	DESCRIPTION	DATE
A	Initial Release	10'.05.17

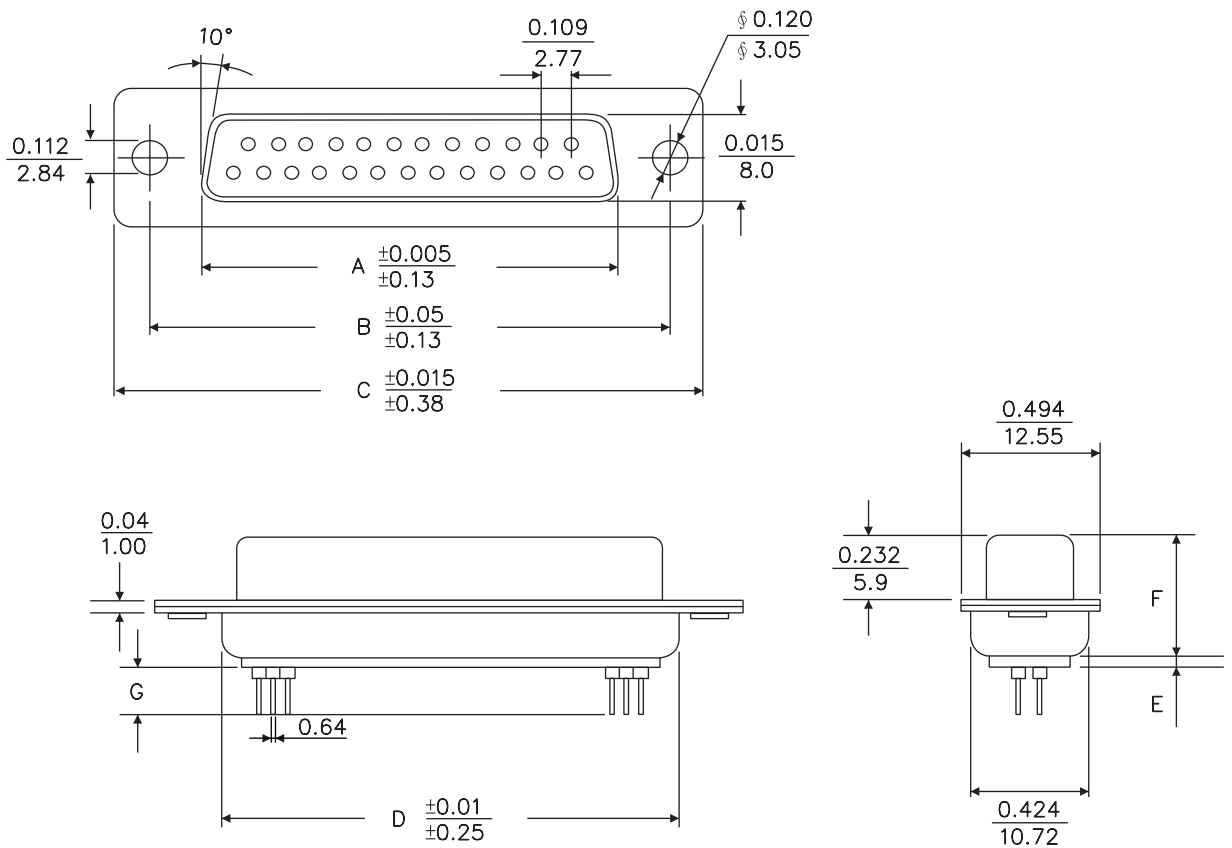

MATERIAL & FINISH SHELL:
STEEL
YELLOW CHAROME(ZINC PLATED)
OR TIN PLATED

PIN CONTACT:
GOLD PLATED OVER NICKEL

INSULATOR:
PBT & GLASS-FIBER REINFORCED

NUMBER OF CONTACT:
9, 15, 25, 37, 50

CURRENT RATING:
5 amp.

DIELECTRIC STRENGTH:
1000V FOR ONE MINUTE

INSULATOR RESISTANCE:
1000MΩMIN. at 500V DC

TEMPERATURE:
−55℃ ~ +105℃

ITEM NO.	A	B	C	D	E	F	G
DB9F0402G−5.5	16.33(0.643)	24.99(0.984)	30.81(1.213)	19.28(0.759)	1.2(0.047)	11.0(0.433)	5.5(0.217)
DB15F0402G−5.5	24.66(0.91)	33.32(1.312)	39.14(1.541)	27.51(1.083)	1.2(0.047)	11.0(0.433)	5.5(0.217)
DB25F0402G−5.5	38.38(1.511)	47.04(1.852)	53.04(2.088)	41.3(1.625)	1.2(0.047)	11.0(0.433)	5.5(0.217)
DB37F0402G−5.5	54.84(2.159)	63.50(2.500)	69.32(2.729)	57.71(2.272)	1.2(0.047)	11.0(0.433)	5.5(0.217)
DB50F0402G−5.5	52.34(2.060)	61.11(2.406)	66.92(2.634)	55.30(2.177)	1.2(0.047)	11.0(0.433)	5.5(0.217)

PANSTRONG COMPANY LTD.				DRAWN BY	TOMMY
				CHECKED	
TITLE:	"D-SUB" CONNECTOR WIRE WRAP STRAIGHT DIP TYPE "SOCKET" MACHINED PIN W/FORK CLIP RIVETTED			APPROVED	
PART NO:	DBxxF0402G-5.5			DRAW NO	
File Number:					
SCALE	/	REV	A	UNIT	mm