REV	DESCRIPTION	DATE
A	Initial Release	06'.10.07

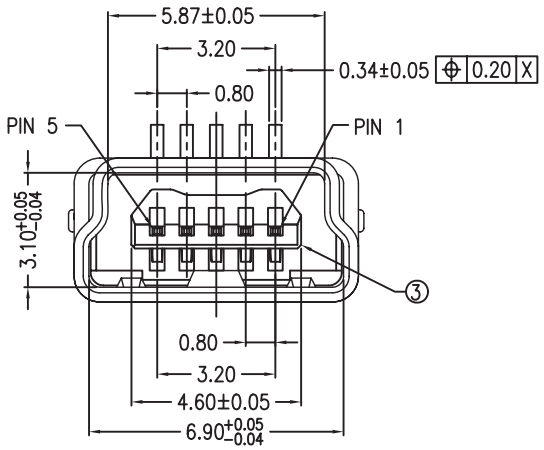

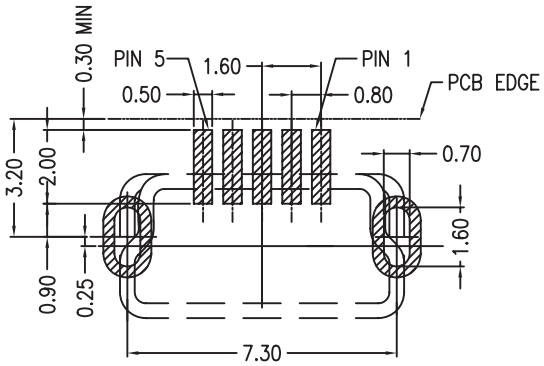

RECOMMENDED PCB LAYOUT
PCB T=1.0mm,TOLERANCE: ±0.05

ITEM	DESC.	MATERIAL	REMARKS
3	HOUSING	LCP	G.F.30%,UL94V-0 COLOR:BLACK
2	SHELL	COPPER ALLOY (T=0.40)	UNDER PLATING: Cu 50u" OVER PLATING:Ni 40u"
1	TERMINAL	COPPER ALLOY (T=0.20)	CONTACT AREA: Au 30u" SOLDER AREA: Au 3~8u" UNDER PLATING:Ni 50u"

Housing: High Temperature Thermoplastics, UL94V-0
Color: Black
Contact: Copper Alloy
Shell: Copper Alloy
Voltage Current Rating: 1AMP. 30V AC
Insulation Resistance: 100MΩ Min.
Contact Resistance: 50mΩ Max.
Dielectric Withstanding Voltage: 100V AC
Temperature Range: −20° C to +80° C

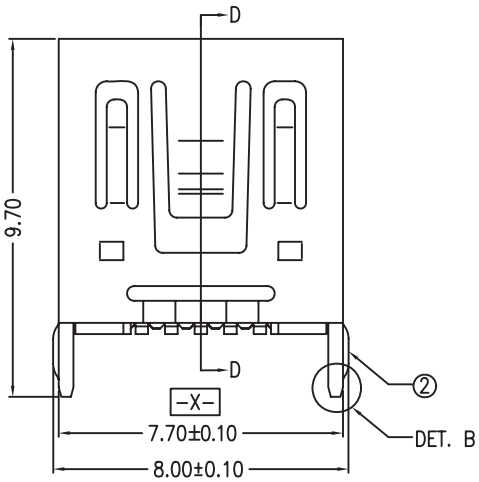

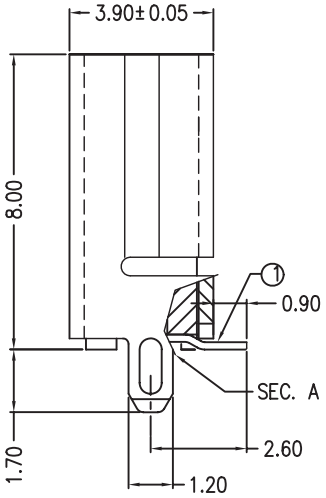

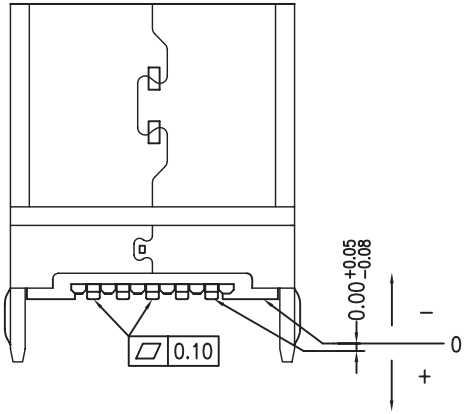

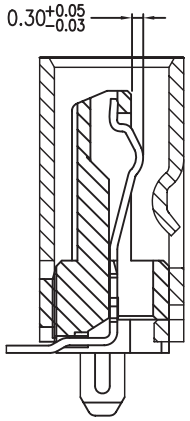

SEC D-D
SCALE 5:1

Order Code:

MUB S03 − 5 F K 30 J R
1 2 3 4 5 6 7

1.S03: SMT, Vertical Type
2.No. of Contact: 5 5pins
3.Type: F Female
4.Insulator Color: K Black
5.Contact Gold: 30 30u" Gold
6.Shell Plating: J: Nickel Plating
7.Package: R: Tape & Reel

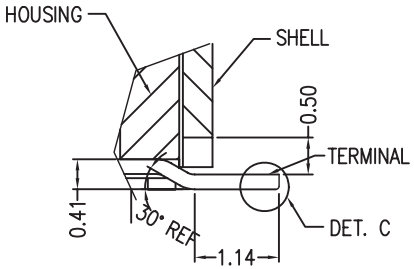

SEC. A
SCALE 10:1

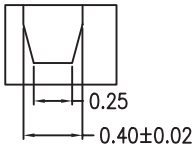

DET. B
SCALE 20:1

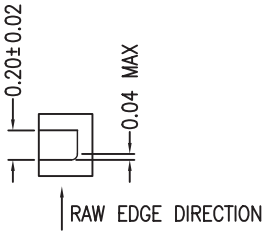

DET. C
SCALE 20:1

TOLERANCES
DIM. ±0.30
ANGLE: ±3°

PANSTRONG COMPANY LTD.				DRAWN BY	TOMMY
				CHECKED	TOMMY
TITLE:	MINI USB-B/F/180°/SMT CONNECTOR			APPROVED	CAROL
PART NO:	MUBS03-5FK			DRAWING NO.	
SCALE	5:1	REV	A	UNIT	mm