REV.	DESCRIPTION	DATE
A2	Initial Release	06.11.06

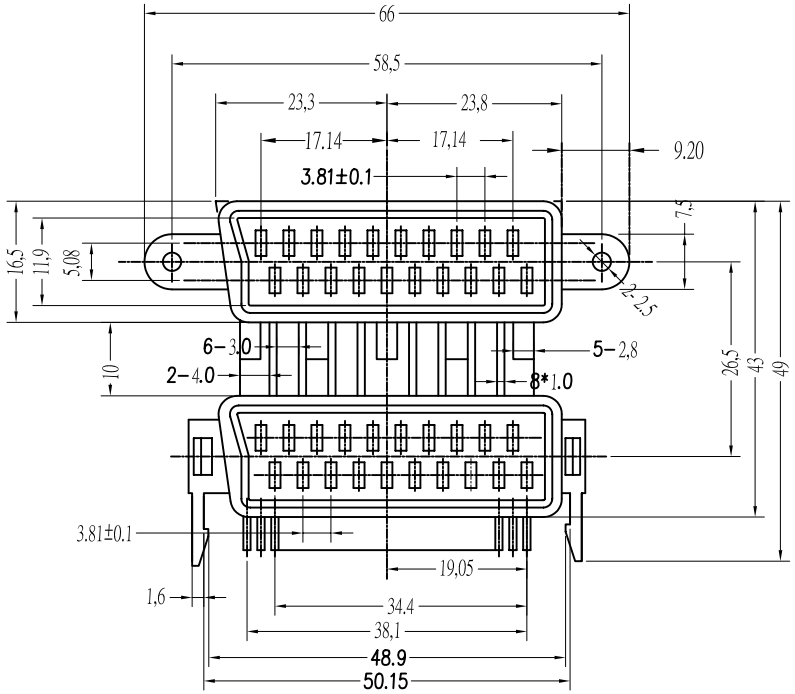

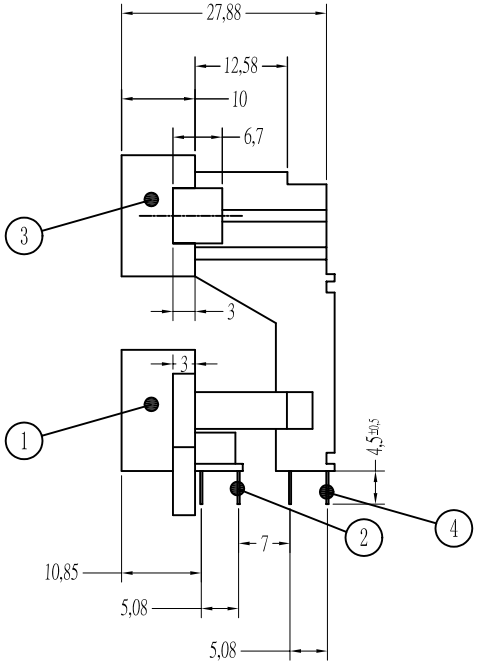

MATERIAL:
A.INSULATOR:PC(94V 2)&GLASS FIBER
B.CONTACT:BRONZE
C.CONTACT PLATED:TIN PLATED

SPECIFICATION:

A.CURRENT RATE:3A/250V AC

CINTACT RESISTANCE:

A.(BRONZE)11.5MΩ AT 2V DC 100mA
B.(PHOSPHOR BRONZE)10.9MΩ AT 2V DC 100mA
C.INSULATOR RESISTANCE:1.5GΩ AT 500V DC 1Min
D.dielectric withstanding:1000Var 1Min

S/N	Part Name	Material
4	Terminal-Bottom	Tin over Brass
3	Plastic-Body-Upper	PC
2	Terminal-Bottom	Tin over Brass
1	Plastic-Body-Upper	PC

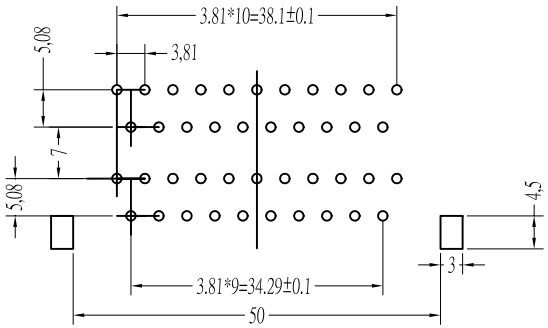

PCB HOLE PATTERN

DWG NO:		MATERIAL:	PANSTRONG COMPANY LTD.
MODEL NO:		FINSH:	
UNIT: mm	SIZE:	COLOR:	PART NAME:
TOLERANCE UNSPECIFIED		DR: TOMMY	
0<L<=4 ±0.05 / 4<L<=16 ±0.10 / 16<L<=64 ±0.15 / 64<L<=250 ±0.20 / 250<L<=500 ±0.25 / 500<L ±0.30 / ANGLE=±0.25°		CHK:	PART NO: ST21Fx2-3019 / REV: A2
		APP:	SCALE: 1:1 / SHEET: 1 of 1