REV	DESCRIPTION	DATE
A	Initial Release	06'.03.22

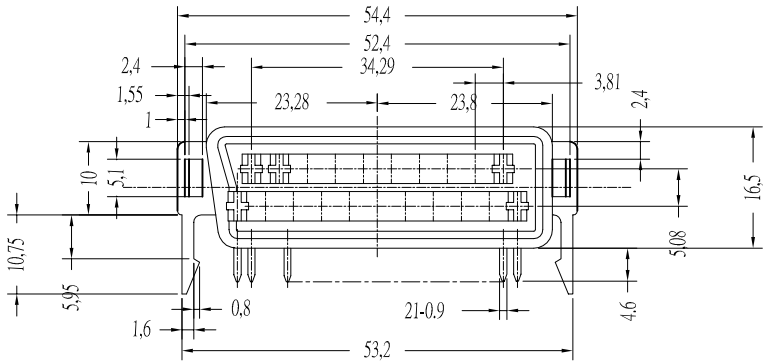

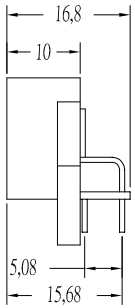

MATERIAL:
A.INSULATOR: NYLON & GLASS FIBER
B.CONTACT:BRONZE
C.CONTACT PLATED:TIN PLATED

SPECIFICATION:

A.CURRENT RATE:3A/250V AC

CONTACT RESISTANCE:

A.(BRONZE)11.5M AT 2V Ω DC 100mA
B.(PHOSPHOR BRONZE)10.9M AT 2VΩ DC 100mA
C.INSULATOR RESISTANCE:1.5G AT Ω500V DC 1Min
D.DIELECTRIC WITHSTANDING:1000Var 1Min

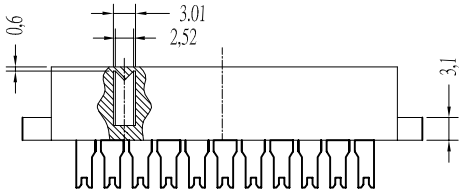

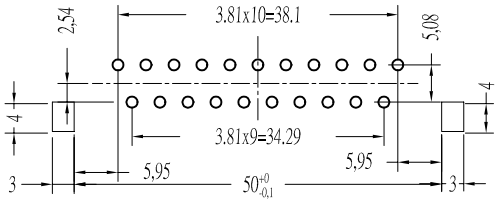

PCB HOLE PATTERN

PANSTRONG COMPANY LTD.				DRAWN BY	TOMMY
				CHECKED	
TITLE:	SCART Female Connector, Through Hole, R/A for PCB			APPROVED	
PART NO:	ST21F-3015			DRAWING NO.	
SCALE	1:1	REV	A	UNIT	mm

TOLERANCE UNSPECIFIED	
.x	±0.3
.xx	±0.20
.xxx	±0.100
ANG.	±1°