REV	DESCRIPTION	DATE
A	Initial Release	11'.07.07

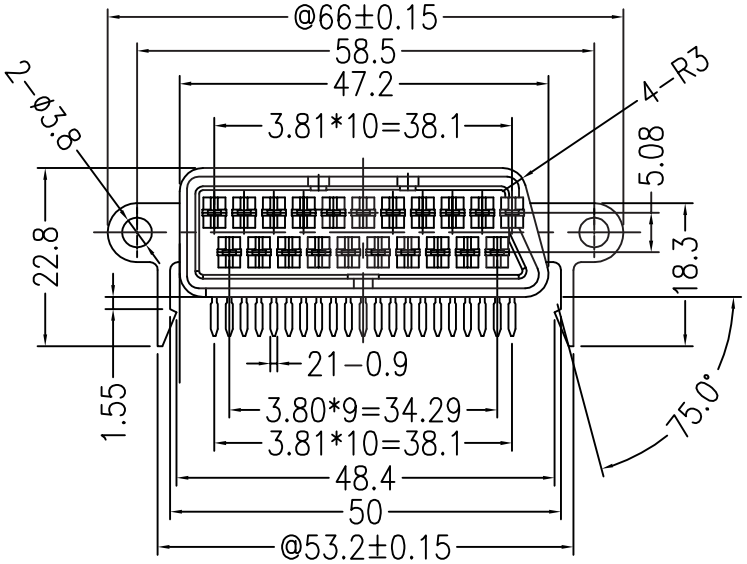

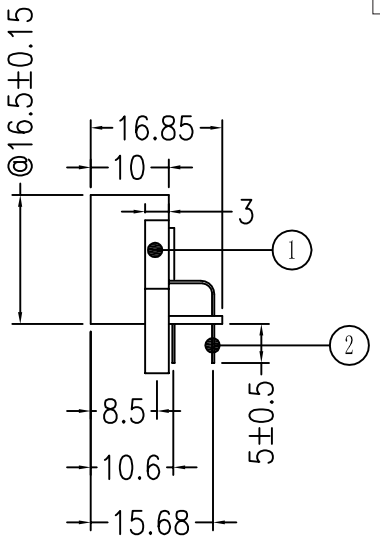

MATERIAL:
- A. INSULATOR: NYLON
- B. CONTACT: BRASS
- C. CONTACT PLATED: TIN PLATED

SPECIFICATION:
- A. CURRENT RATE: 3A/250V AC

CONTACT RESISTANCE:
- A. (BRASS) 25mΩ max
- B. INSULATOR RESISTANCE: 5000MΩ AT100V DC1Min
- C. **DIELECTRIC WITHSTANDING**: 350Var 1Min

Notation:
1. Conform HSFstandard
2. Have "@" symbol for the quality focus of measurement

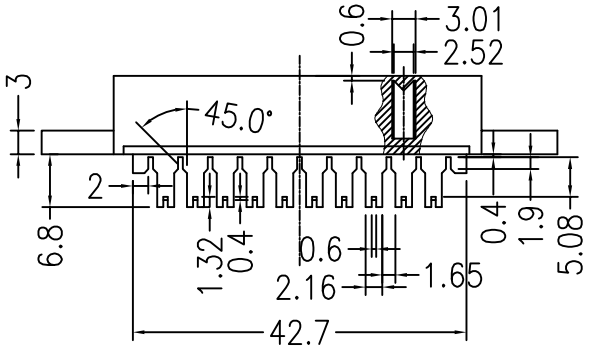

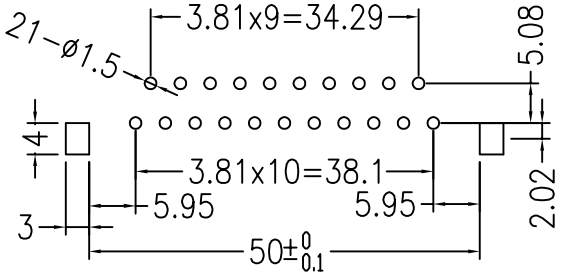

PCB HOLE PATTERN

2	90° Contact	Tin over Brass
1	SC21S90° 66MM Round Ears, Reverse Type	PC
NO.	PART NAME	MATERIAL

PANSTRONG COMPANY LTD.				DRAWN BY	TOMMY
				CHECKED	
TITLE:	Reverse Right Angle with Thin-Round Screw Mounting Holes and Lugs ø3.8mm			APPROVED	
PART NO:	ST21F-3011			DRAWING NO.	
SCALE	1:1	REV	A	UNIT	mm

TOLERANCES UNLESS OTHERWISE STATED	
0<L≤4	±0.10
4<L≤16	±0.15
16<L≤64	±0.25
64<L≤250	±0.35
250<L≤500	±0.45
500<L	±0.55
ANGLE=	±1°