REV.	ECN NO	LOCATIONS	DESCRIPTION	DATE	REVISER	APPD
A			Initial Release	06.07.27		

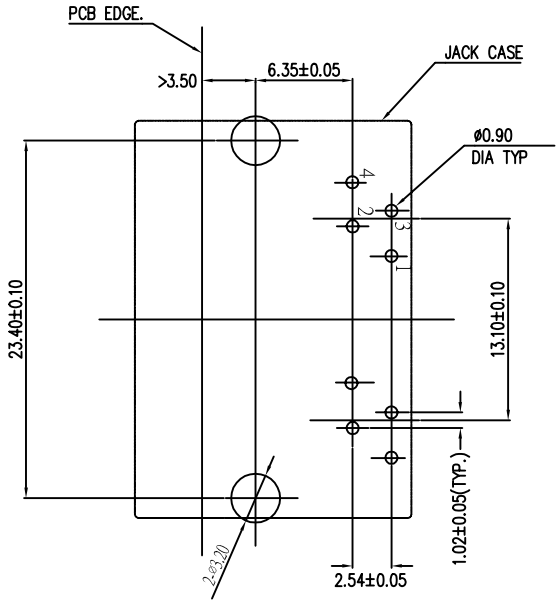

P.C.B. HOLE LAYOUT

(Seen from Component Side.)

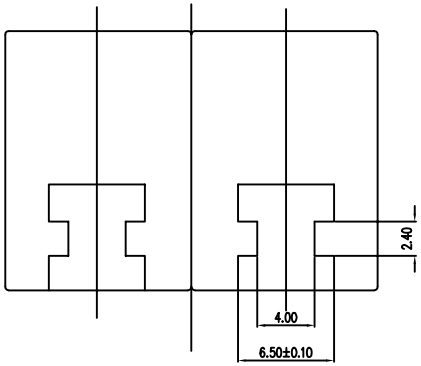

SPECIFICATIONS

MATERIAL:

1. Housing : PBT Polyester UL94V0
2. Color : Black
3. Contacts : 0.45mm Diameter Phos-Bronze Plated With Hard Gold

ELECTRICAL:

1. Current Rating : 1.5 AMP MAX
2. Voltage Rating : 150 VAC MAX
3. Contact Resistance : 20 milliohms MAX, initial
4. Insulation Resistance : 500 Megohms MIN
5. Dielectric Withstanding Voltage : 1000 VAC, 1min

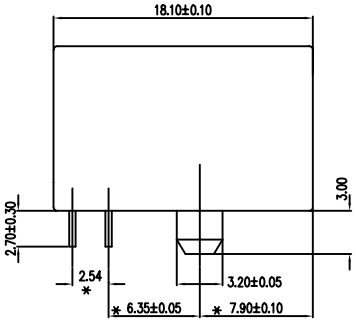

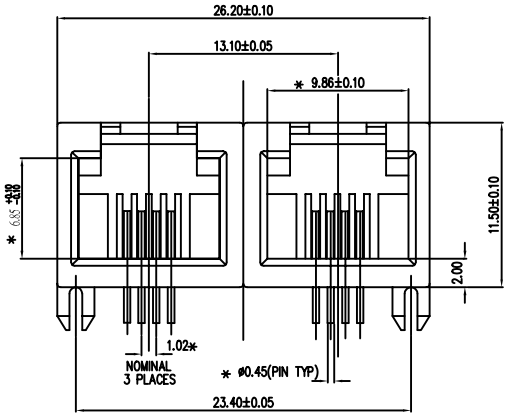

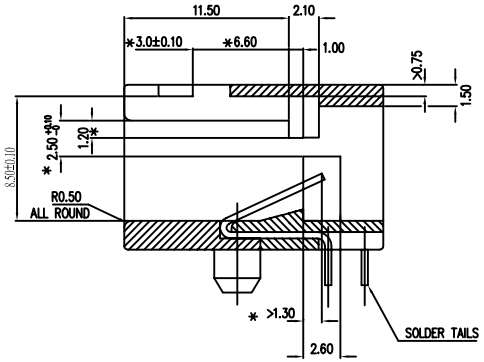

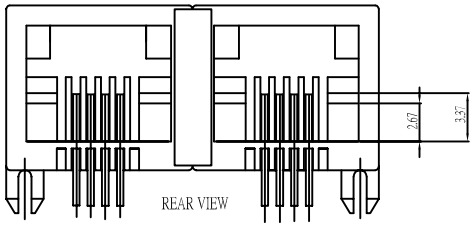

DWG NO:		MATERIAL:	PANSTRONG COMPANY LTD.
MODEL NO:		FINSH:	
UNIT: mm	SIZE:	COLOR:	PART NAME: Twin Type Very L/P Modulator Jack(Plastic Pegs)
TOLERANCE UNSPECIFIED .x ±0.3 .xx ±0.20 .xxx ±0.100 ANG. ±1°		DR: TOMMY	
		CHK:	PART NO: MJL16401KXX-2 REV:
		APP:	SCALE: Free SHEET: 1 of 1