REV	DESCRIPTION	DATE
A	Initial Release	06.11.02

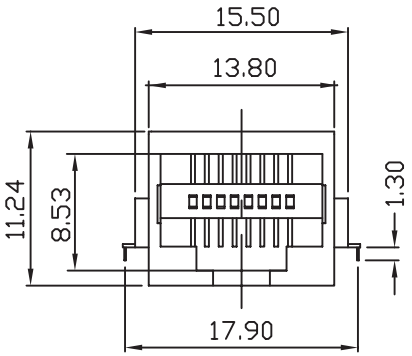

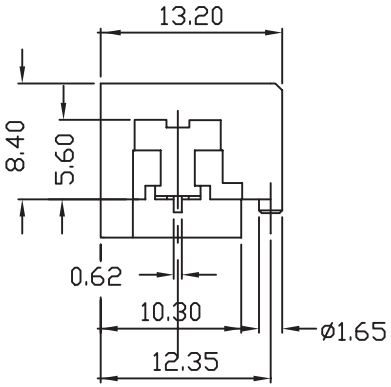

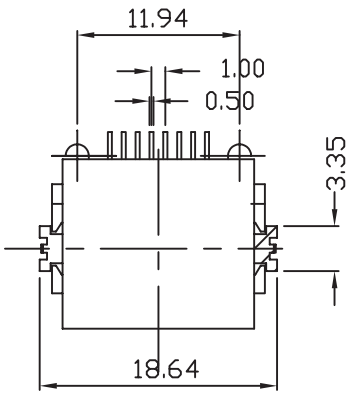

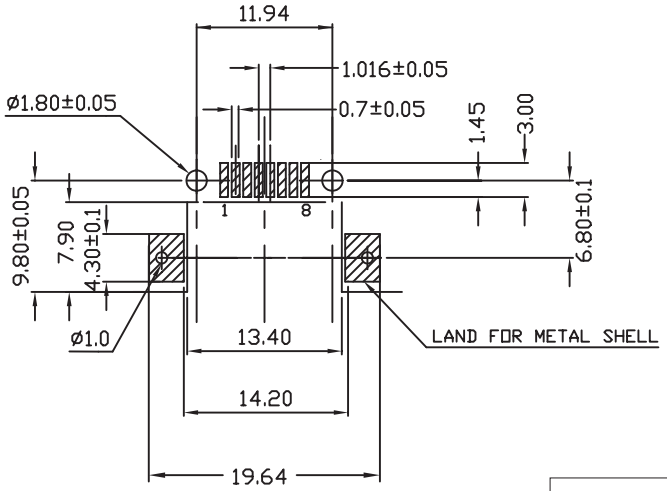

PCB LAYOUT

SPECIFICATIONS

MATERIAL:

1. Housing : PPS. Polyester UL94V0
2. Color : Black
3. Contacts : Selective Gold Plating

ELECTRICAL:

1. Current Rating : 1.5 AMP MAX
2. Voltage Rating : 150 VAC MAX
3. Contact Resistance : 30 milliohms MAX, initial
4. Insulation Resistance : 500 Megohms MIN
5. Dielectric Withstanding Voltage : 1000 VAC, 1min

PART NO. MJH880301K**

Contact Gold Plating
06 : 6u" Gold
:
50 : 50u" Gold

TOLERANCE
.X ±0.3
.XX ±0.20

PANSTRONG COMPANY LTD.				DRAWN BY	TOMMY
				CHECKED	
TITLE:	RJ45 8P Modular Jack(SMT)			APPROVED	
PART NO:	MJH880301K**			DRAW NO	
DRAW. BOX NO:					
SCALE	Free	REV	A	UNIT	mm