USB 2.0/3.0/C Type HDMI/Firewire 1394 Connectors

Introduction

Founded in 1992, Panstrong started her business with connectors for computer peripherals in Taiwan. As being a customer-oriented company, Panstrong always try all her best to meet customer's maximum satisfaction, which won every customer's trust and support. To provide the products with reliable quality, competitive prices and fast delivery always are Panstrong's main goals.

Panstrong provides a wide range of USB TID certified USB 2.0/3.0/3.1 connectors, HDMI approved connectors, and high quality of Firewire 1394 connectors. In the future Panstrong will constantly observe market trend and develop the market-oriented products.

Index

1.USB 3.1 C Type Connectors

- 24P Socket, SMT, Right Angle, SMT+DIP Pins above PCB A1
- 24P Socket, SMT, Right Angle, SMT+DIP Pins Middle Mount PCB A1
- 24P Socket, SMT, Right Angle, Full SMT Pins above PCB A2
- 24P Socket, SMT, Right Angle, Full SMT Pins Middle Mount PCB A2
- 24P Socket, SMT, Right Angle, Single Row SMT Pins above PCB A3
- 24P Plug, Straddle PCB for Wire Solder and Molding A3
- 22P Plug with Metal Shell for Cable Molding A4

2.USB 2.0 C Type Connectors

- 24P Socket, SMT, Right Angle, SMT+DIP Pins Middle Mount PCB B1
- 22P Plug with Metal Shell for Cable Molding B1

3.USB 3.0 Connectors

- A Type 9P Socket, Through Hole, Right Angle for PCB C1
- A Type 9P Socket, Through Hole, Vertical for PCB C1
- A Type 9P Socket, SMT, Middle Mount PCB C2
- A Type 9P Socket, Double Deck, Through Hole, Right Angle for PCB C2
- A Type 9P Socket, Through Hole Upright for PCB C3
- A Type 9P Plug, SMT, Right Angle for PCB C3
- A Type 9P Plug, Through Hole, Right Angle for PCB C4
- A Type 9P Plug for Wire Solder and Molding C4
- B Type 9P Socket, Through Hole, Right Angle for PCB C5
- B Type 9P Socket, Through Hole, Vertical for PCB C5
- B Type 9P Plug for Wire Solder and Molding C6
- Micro USB 10P Socket, SMT, Right Angle for PCB C6

4.MicroUSB Connectors

- B Type 5P Socket, SMT, Right Angle for PCB D1
- B Type 5P Socket, SMT, Vertical for PCB D1
- AB Type 5P Socket, SMT, Right Angle for PCB D2
- A Type 5P Plug for Cable Modling D2
- B Type 5P Plug for Cable Molding D3

5.MiniUSB Connectors

- B Type 5P Socket, SMT, Right Angle for PCB E1
- B Type 5P Socket, SMT, Vertical for PCB E1
- B Type 5P Socket, Through Hole, Right Angle for PCB E2
- B Type 5P Socket, Through Hole, Vertical for PCB E2
- B Type 5P Plug for Cable Molding E3
- B Type 5P Plug, Through Hole, R/A for PCB E3
- A Type 4P Plug for Cable Molding or Assembly E4
- A Type 4P Socket, SMT, Right Angle for PCB E4
- B Type 4P Socket, SMT, Right Angle for PCB E5
- B Type 4P Plug for Cable Molding E5
- B Type 8P Socket, SMT, Right Angle for PCB E6
- B Type 8P Plug for Cable Molding E6

6.USB Connectors

- A Type 4P Socket, Through Hole, Right Angle for PCB F1
- A Type 4P Socket, Through Hole, Right Angle Middle Mount for PCB Edge F1
- A Type 4P Socket, Through Hole, Vertical for PCB F2
- A Type 4P Socket, Through Hole, Upright for PCB F2

Index

6.USB Connectors

- A Type 4P Socket, Through Hole, Upright Slim Type for PCB F3
- A Type 4P Socket, SMT, Right Angle for PCB F3
- A Type 4P Socket for Wire Solder F4
- A Type 4P Socket with Additional Metal Cover for Wire Solder F4
- A Type 4P Socket, Double Deck, Through Hole for PCB F5
- A Type 4P Socket 2 Deck, Through Hole, Vertical for PCB F5
- A Type 4P Scoket 3 Deck, Through Hole, Right Angle for PCB F6
- A Type 4P Scoket 4 Deck, Through Hole, Right Angle for PCB F6
- A Type 4P Plug, Through Hole, Right Angle for PCB F7
- A Type 4P Plug, SMT, Right Angle for PCB F7
- A Type 4P Plug, SMT, Right Angle Middle Mount for PCB F8
- A Type 4P Plug, Solder for Cable Molding F8
- B Type 4P Socket, Through Hole, Right Angle Back Open for PCB F9
- B Type 4P Socket, Through Hole, Right Angle with Back Shield for PCB F9
- B Type 4P Socket, Through Hole, Right Angle with Top Flange for PCB F10
- B Type 4P Socket, Through Hole, Vertical for PCB F10
- B Type 4P Socket, SMT, Right Angle for PCB F11
- B Type 4P Socket, SMT, Vertical for PCB F11
- B Type 4P Plug, Solder for Cable Molding F12
- A,B Type Receptacle Dust Cover F12

7.HDMI Connectors

- 19P Socket, SMT, Right Angle for PCB G1
- 19P Socket, SMT, Right Angle with Top Flange for PCB G1
- 19P Socket, SMT, Vertical with Side Flanges for PCB G2
- 19P Socket, Through Hole, Right Angle with Top Flange for PCB G2
- 19P Socket, Double Deck, Through Hole, Right Angle for PCB G3
- 19P Plug with Solder Pad for Wire Solder G3

8.Mini HDMI Connectors

- 19P Socket, SMT, Right Angle for PCB H1
- 19P Plug with Solder Pad for Wire Solder and Molding H1

9.Micro HDMI Connectors

- 19P Socket, SMT, Right Angle, SMT+DIP Pins above PCB I1
- 19P Plug with Crimp Shell for Cable Molding I1

10.Firewire 1394 Connectors

- 1394 6P Socket, SMT, Right Angle for PCB J1
- 1394 6P Socket, Through Hole, Upright for PCB J1
- 1394 6P Socket, Through Hole, Right Angle for PCB J2

24P Socket, SMT, Right Angle, SMT+DIP Pins above PCB

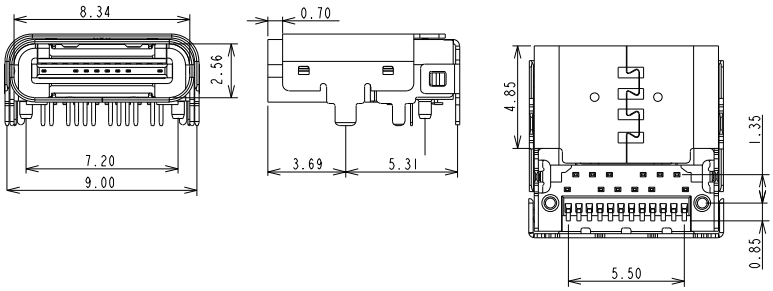

PART NO.
UB31CR31 - 24 F K xx x x
1 2 3 4 5 6

1. Contact Positions:
   24: 24 pins
2. Contact Type:
   F: Female Receptacle
3. Insulator Color
   K: Black
4. Contact Plating:
   01: Selective G/F
   30: Selective 30u" Gold
5. Shell Plating:
   N: Solderable Nickel
6. Dip Pin Length
   0: 1.0mm
   2: 1.6mm

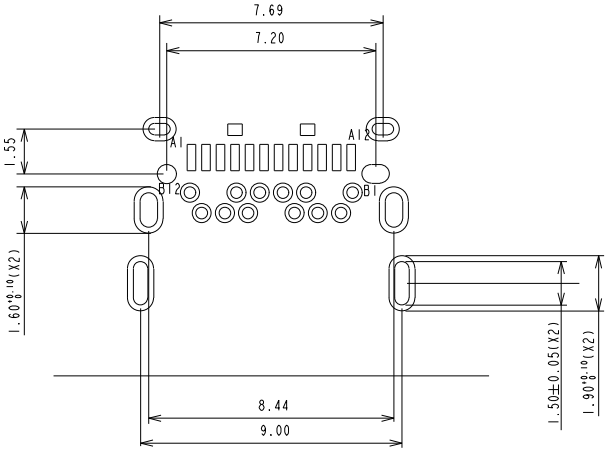

24P Socket, SMT, Right Angle, SMT+DIP Pins Middle Mount PCB

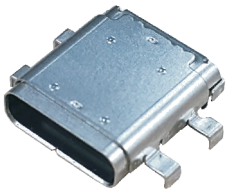

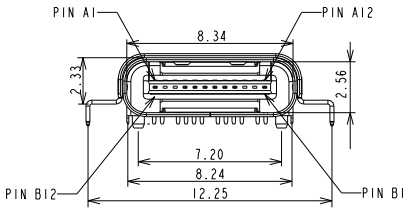

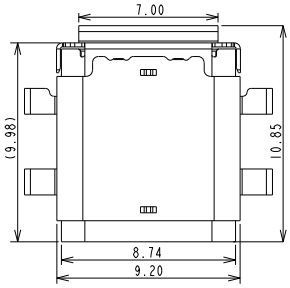

PART NO.
UB31CR31LB - 24 F K xx x
1 2 3 4 5

1. Contact Positions:
   24: 24 pins
2. Contact Type:
   F: Female Receptacle
3. Insulator Color
   K: Black
4. Contact Plating:
   01: Selective G/F
   30: Selective 30u" Gold
5. Shell Plating:
   N: Solderable Nickel

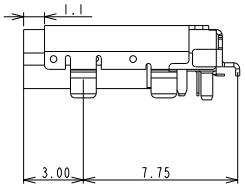

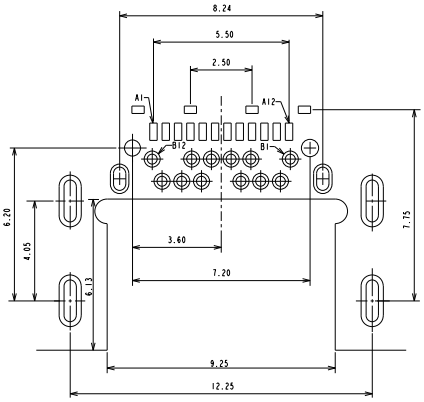

24P Socket, SMT, Right Angle, Full SMT Pins above PCB

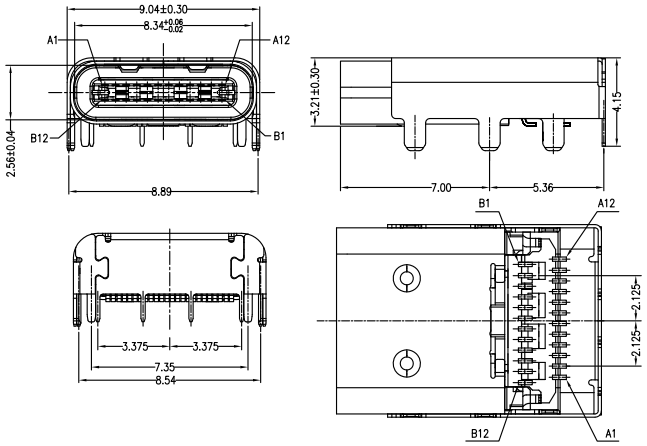

PART NO.
UB31CR33 - 24 F K xx x
1 2 3 4 5

1. Contact Positions:
   24: 24 pins
2. Contact Type:
   F: Female Receptacle
3. Insulator Color
   K: Black
4. Contact Plating:
   01: Selective G/F
   30: Selective 30u” Gold
5. Shell Plating:
   N: Solderable Nickel

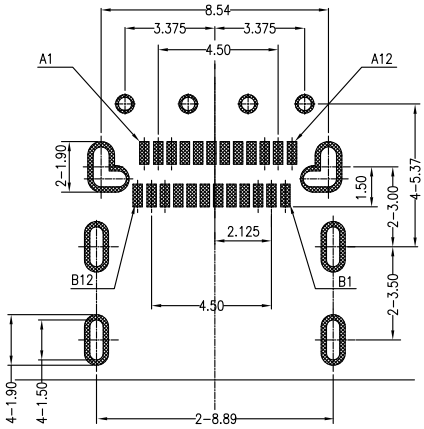

24P Socket, SMT, Right Angle, Full SMT Pins Middle Mount PCB

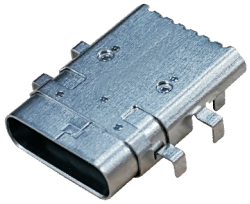

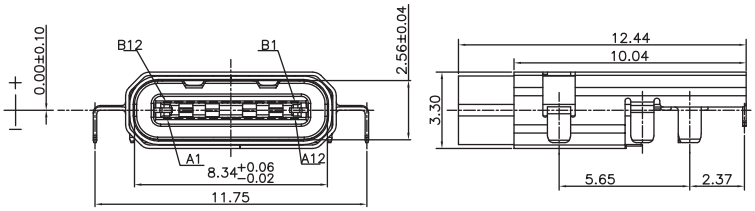

PART NO.
UB31CR33LB - 24 F K xx x
1 2 3 4 5

1. Contact Positions:
   24: 24 pins
2. Contact Type:
   F: Female Receptacle
3. Insulator Color
   K: Black
4. Contact Plating:
   01: Selective G/F
   30: Selective 30u” Gold
5. Shell Plating:
   N: Solderable Nickel

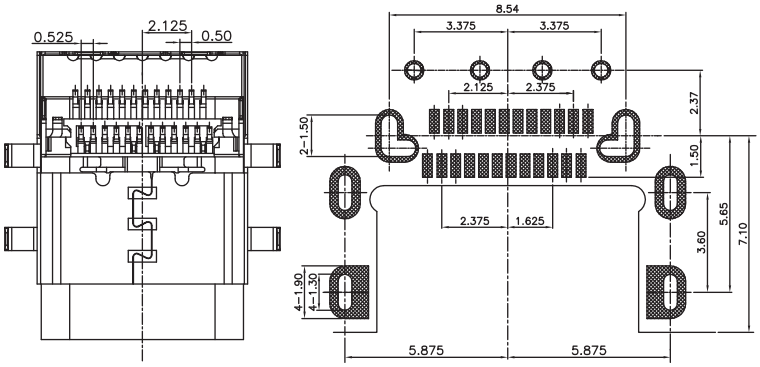

24P Socket, SMT, Right Angle, Single Row SMT Pins above PCB

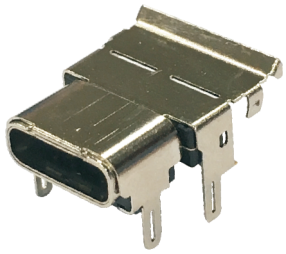

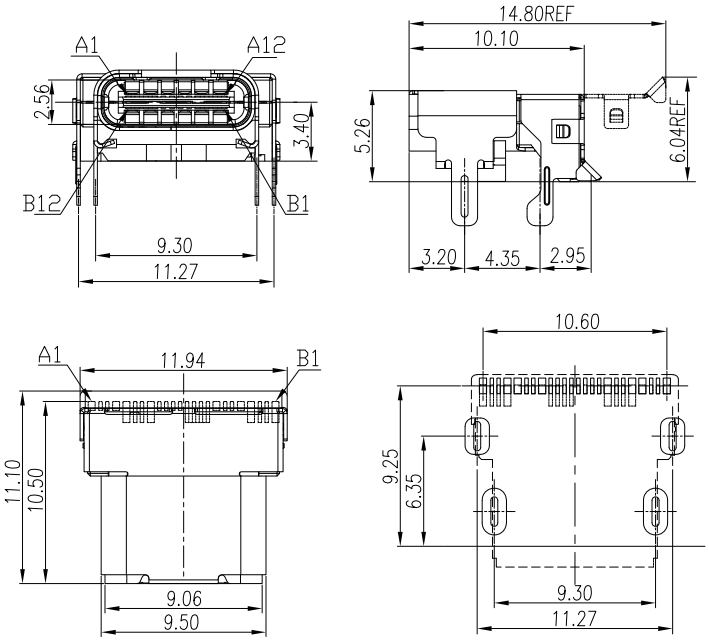

PART NO.
UB31CR34 - 24 F K xx x
1 2 3 4 5

1. Contact Positions:
   24: 24 pins
2. Contact Type:
   F: Female Receptacle
3. Insulator Color
   K: Black/Thermoplastic
4. Contact Plating:
   01: Selective G/F
   30: Selective 30u" Gold
5. Shell Plating:
   N: Nickel

24P Plug, Straddle PCB for Wire Solder and Molding

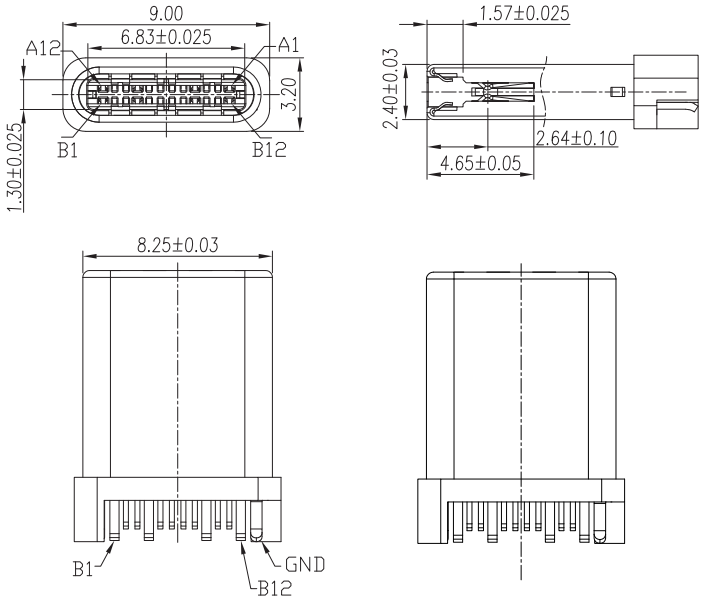

PART NO.
UB31CS52 - 24 M K xx x
1 2 3 4 5

1. Contact Positions:
   24: 24 pins
2. Contact Type:
   M: Male Plug
3. Insulator Color
   K: Black/Thermoplastic
4. Contact Plating:
   01: Selective G/F
   30: Selective 30u" Gold
5. Shell Plating:
   N: Nickel

22P Plug with Metal Shell for Cable Molding

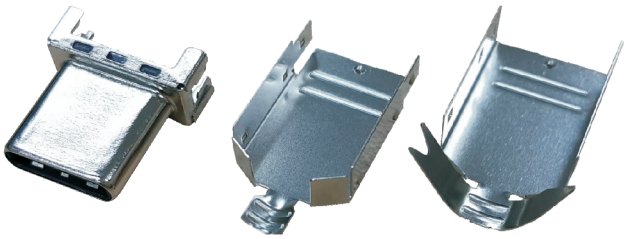

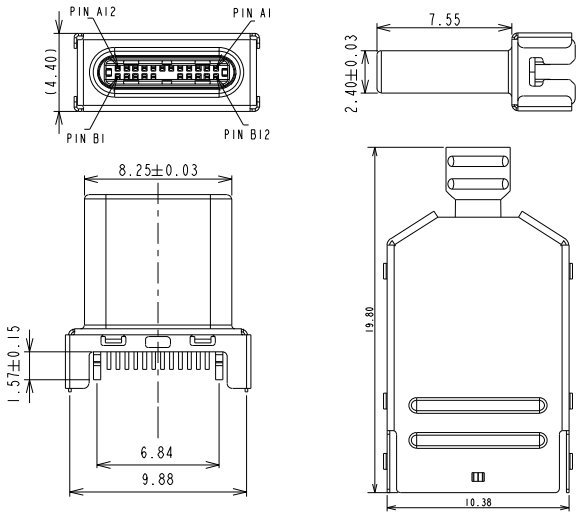

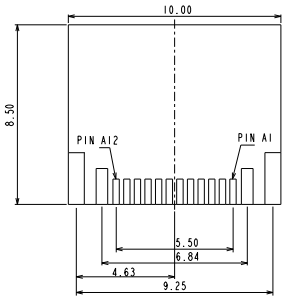

PART NO.
UB31C11B - 22 M KH x x x
1 2 3 4 5 6

1. Contact Positions:
   22: 22 pins
2. Contact Type:
   M: Male Plug
3. Insulator:
   KH: Black PA-46
4. Contact Plating:
   01: Selective G/F
   30: Selective 30u” Gold
5. Shell Plating:
   N: Solderable Nickel
6. Others:
   0: For 3.1 Cable OD 5.0mm in Tape & Reel
   1: For 3.1 Cable OD 5.0mm in Tray

24P Socket, SMT, Right Angle, SMT+DIP Pins Middle Mount PCB

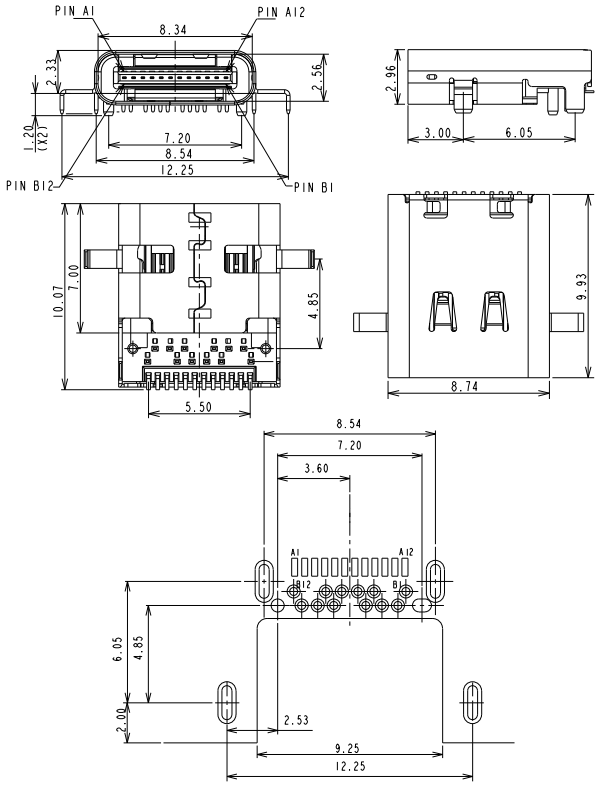

PART NO.
UB2CR31LB - 24FK x x x
1 2 3

1. Contact Plating:
   01: Flash Gold
   30: 30u" Gold
2. Shell Plating:
   N: Soldering Nickel
3. Shell Pin(DIM A & B)
   0: 1.0mm
   1: 1.3mm

22P Plug with Metal Shell for Cable Molding

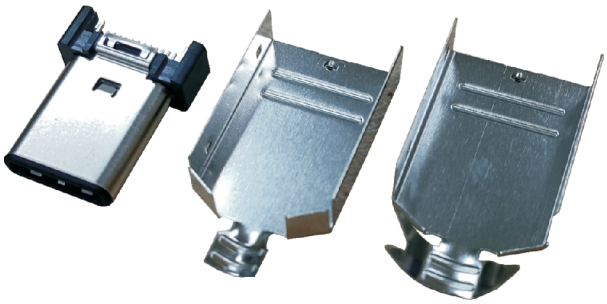

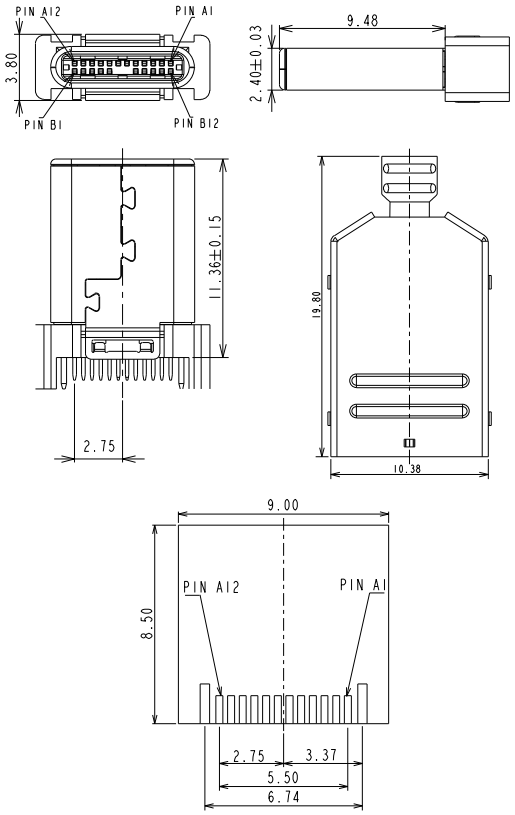

PART NO.
UB2C11B - 22 M KH x x x
1 2 3 4 5 6

1. Contact Positions:
   22: 22 pins
2. Contact Type:
   M: Male Plug
3. Insulator:
   KH: Black PA-46
4. Contact Plating:
   01: Selective G/F
   30: Selective 30u" Gold
5. Shell Plating:
   N: Solderable Nickel
6. Others:
   0: For 2.0 Cable OD 3.6mm in Tape & Reel
   1: For 2.0 Cable OD 3.6mm in Tray
   2: For 2.0 Cable OD 5.0mm in Tape & Reel

A Type 9P Socket, Through Hole, Right Angle for PCB

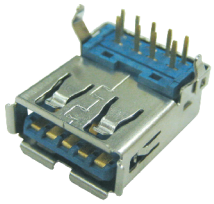

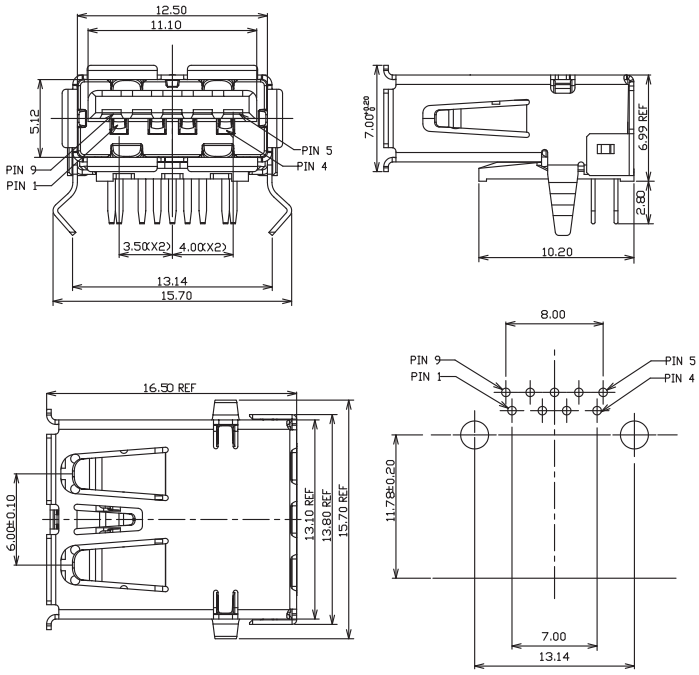

PART NO.
UB3AR01 - 9 F B xx J 0
1 2 3 4 5 6 7

1. USB 3.0 A Type, Through Hole, Right Angle
2. No. of Contact: 9 Positions
3. Contact Type:
   F: Female Receptacle
4. Insulator Color:
   B: Blue K: Black
5. Contact Plating:
   01: Flash Gold
   PG: Pa-Ni 30u”+Au
6. Shell Plating:
   J: Solderable Nickel
7. Housing Material:
   0: Halogen Free/Thermoplastic

A Type 9P Socket, Through Hole, Vertical for PCB

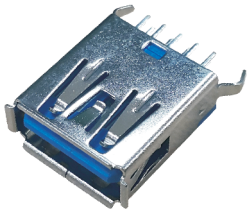

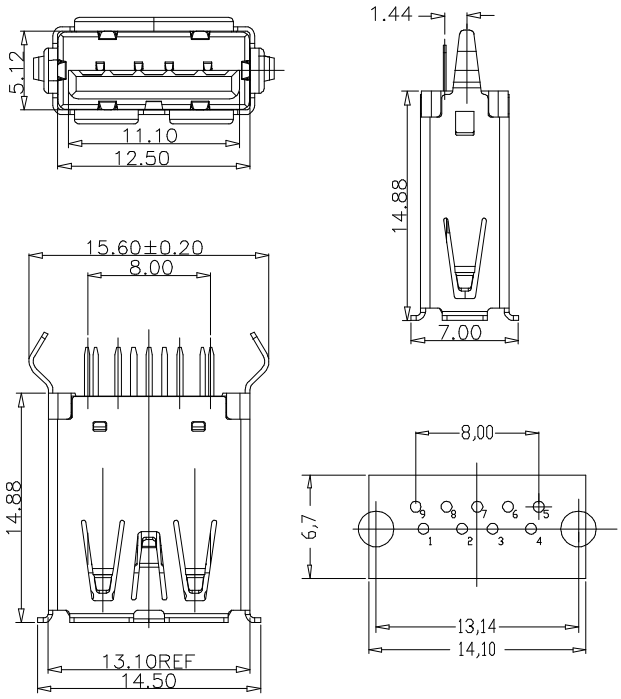

PART NO.
UB3AS02 - 9 F B xx x
1 2 3 4 5 6

1. USB 3.0 A Type, Through Hole, Vertical
2. No. of Contact: 9 Positions
3. Contact Type:
   F: Female Receptacle
4. Insulator Color:
   B: Blue
5. Contact Plating:
   01: Selective Gold Flash
   03: 3u” Selective Gold
   15: 15u” Selective Gold
   30: 30u” Selective Gold
6. Shell Plating:
   J: Nickel
   G: Gold Flash

A Type 9P Socket, SMT, Middle Mount PCB

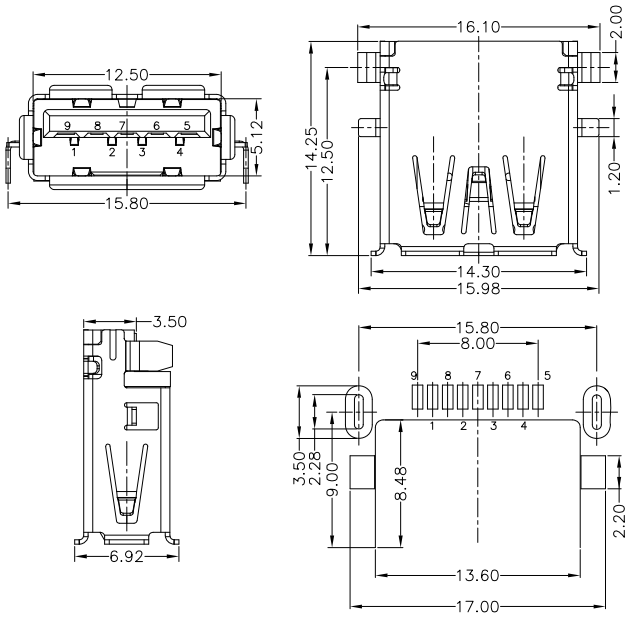

PART NO.
UB3AR03LB - 9 F B xx J
1 2 3 4

1. USB 3.0 A Type, SMT, Middle Mount PCB
2. Contact Type:
   F: Female Receptacle
3. B: Blue Insulator
4. XX: 01: Gold Flash
   15: 15u" Gold Plating
   30: 30u" Gold Plating

A Type 9P Socket, Double Deck, Through Hole, Right Angle for PCB

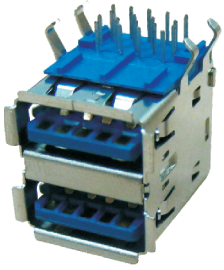

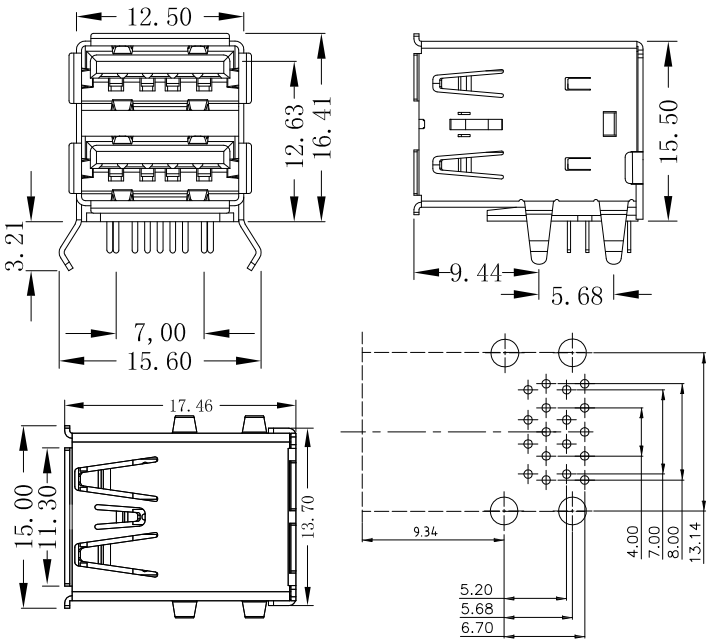

PART NO.
UB3AR01 - 9 F x 2 B xx J0
1 2 3 4 5 6

1. USB 3.0 A Type, Through Hole, Right Angle
2. No. of Contact: 9 Positions
3. Contact Type:
   F: Female Receptacle
4. Insulator Color:
   B: Blue
5. Contact Plating:
   01: Selective Gold Flash
   03: 3u" Selective Gold
   15: 15u" Selective Gold
   30: 30u" Selective Gold
6. Shell Plating:
   J: Nickel

A Type 9P Socket, Through Hole, Upright for PCB

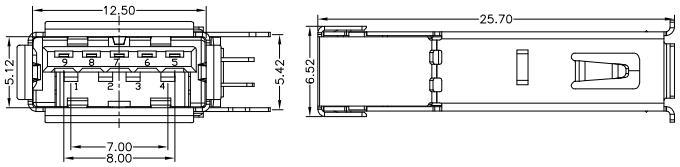

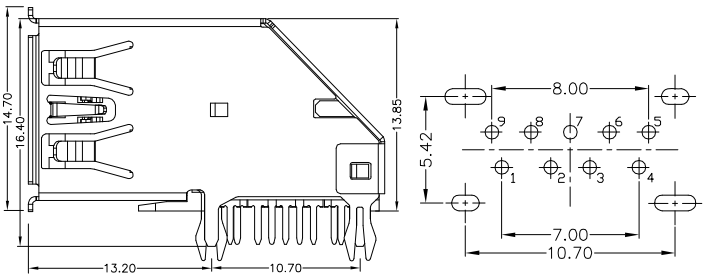

PART NO.
UB3AR04 - 9 F B xx J - 2
1 2 3 4 5 6

1. USB 3.0 A Type, Upright 90°, DIP
2. No.of Contacts: 9 Positions
3. Contact Type:
   F: Female Receptacle
4. Insulator Color:
   B: Blue
5. Contact Plating:
   01: Gold Flash
   15: 15u" Gold
   30: 30u" Gold
6. Shell Plating:
   J: Nickel

A Type 9P Plug, SMT Right Angle for PCB

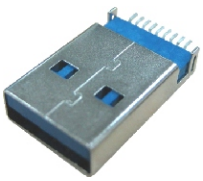

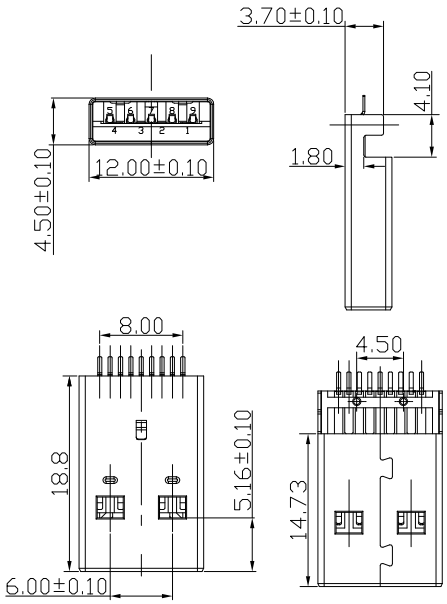

PART NO.
UB3AR03 - 9 M B xx x 0 R
1 2 3 4 5 6 7 8

1. USB 3.0 A Type, SMT, Right Angle
2. No.of Contacts: 9 Positions
3. Contact Type:
   M: Male Plug
4. Insulator Color:
   B: Blue
5. Contact Plating:
   01: Selective Gold Flash
   15: 15u" Selective Gold
   30: 30u" Selective Gold
6. Shell Plating: J: Nickel
7. Locating Pegs:
   0: without pegs
8. Package:
   Blank: PVC Tube
   R: Tape & Reel

A Type 9P Plug, Through Hole, Right Angle for PCB

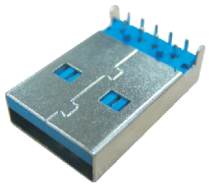

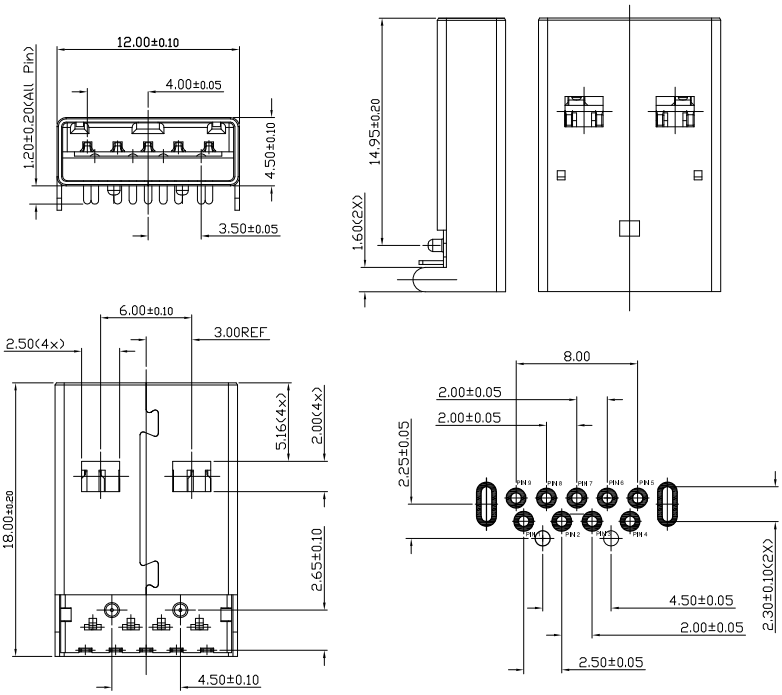

PART NO.
UB3AR01 - 9 M B xx x
1 2 3 4 5 6

1. USB 3.0 A Type, Through Hole, Right Angle
2. No. of Contact: 9 Positions
3. Contact Type:
   M: Male Plug
4. Insulator Color:
   B: Blue
5. Contact Plating:
   01: Selective Gold Flash
   15: 15u" Selective Gold
   30: 30u" Selective Gold
6. Shell Plating:
   J: Nickel

A Type 9P Plug for Wire Solder and Molding

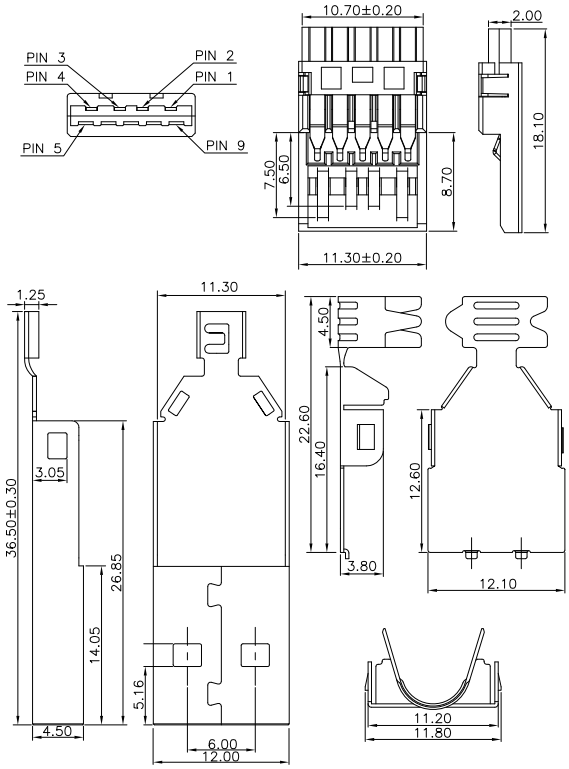

PART NO.
UB3A11 - 9 M B xx x x - 2
1 2 3 4 5 6 7

1. USB 3.0 A Type, Wire Solder
2. No. of Contact: 9 Positions
3. Contact Type:
   M: Male Plug
4. Insulator Color:
   B: Blue
5. Contact Plating:
   01: Selective Gold Flash
   03: 3u" Selective Gold
   15: 15u" Selective Gold
   30: 30u" Selective Gold
6. Shell Plating: J: Nickel G: Gold Flash
7. Cable O.D.
   A: 4mm B: 6mm

B Type 9P Socket, Through Hole, Right Angle for PCB

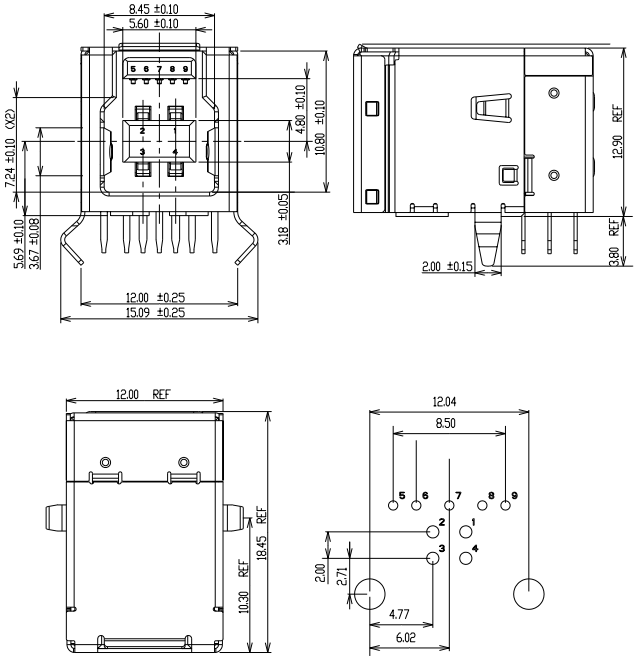

PART NO.
UB3BR01 - 9 F K PG J 0
1 2 3 4 5 6 7

1. USB 3.0 B Type, Through Hole, Right Angle
2. No. of Contact: 9 Positions
3. Contact Type:
   F: Female Receptacle
4. Insulator Color:
   K: Black
5. Contact Plating:
   01: Flash Gold
   PG: Pa-Ni 30u"+Au
6. Shell Plating:
   J: Solderable Nickel
7. Housing Material:
   0: Halongen Free/Thermoplastic

B Type 9P Socket, Through Hole, Vertical for PCB

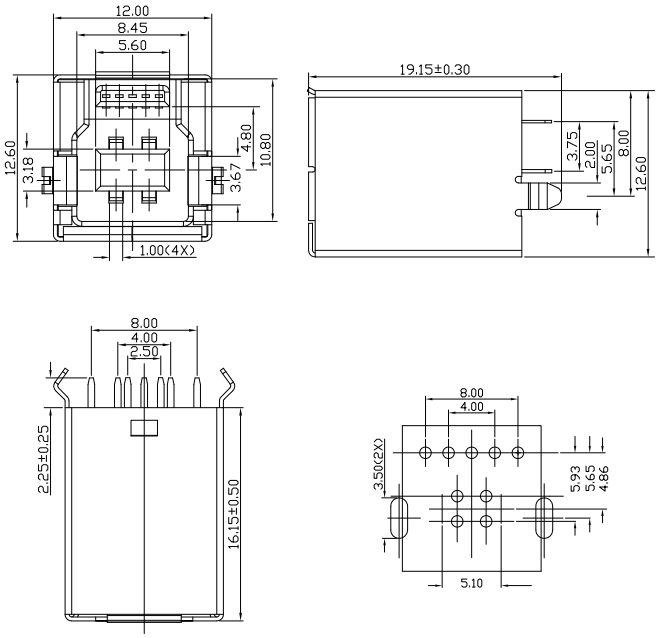

PART NO.
UB3BS02 - 9 F B xx x
1 2 3 4 5 6

1. USB 3.0 B Type, Through-Hole, Vertical
2. No. of Contacts: 9 Positions
3. Contact Type:
   F: Female Receptacle
4. Insulator Color:
   B: Blue
5. Contact Plating:
   01: Selective Gold Flash
   15: 15u" Selective Gold
   30: 30u" Selective Gold
6. Shell Plating:
   J: Nickel
   G: Flash Gold

B Type 9P Plug for Wire Solder and Molding

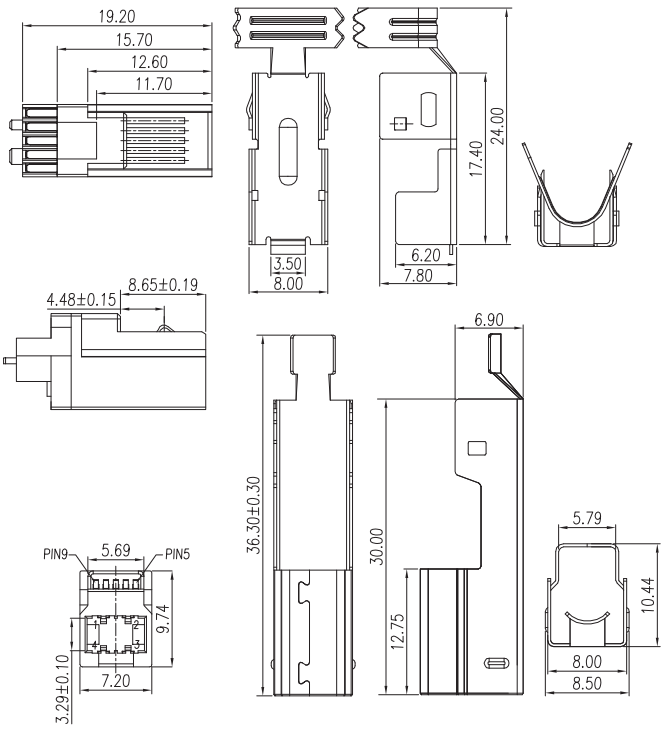

PART NO.
UB3B11 - 9 M B 30 J - 2
1 2 3 4 5 6

1. USB 3.0 B Type, Wire Solder
2. No. of Contact: 9 Positions
3. Contact Type:
   M: Male Plug
4. Insulator Color:
   B: Blue
5. Contact Plating:
   01: Selective Gold Flash
   03: 3u" Selective Gold
   30: 30u" Selective Gold
6. Shell Plating:
   J: Nickel
   G: Flash Gold

Micro USB 10P Socket, SMT, Right Angle for PCB

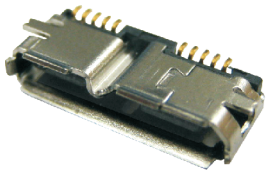

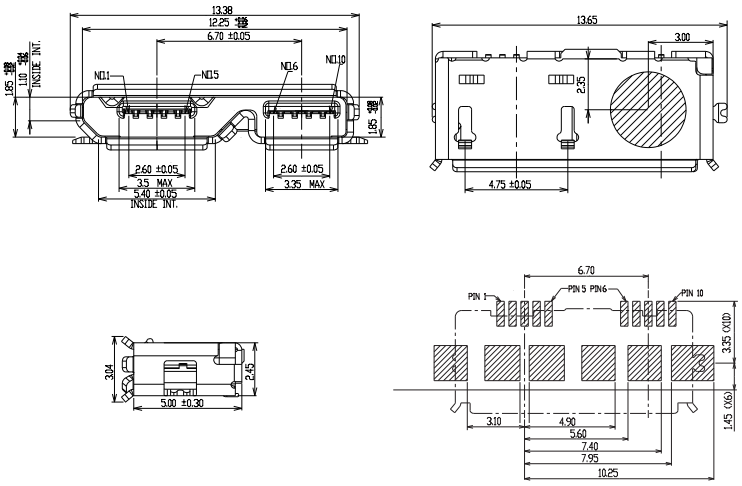

PART NO.
MMUB3R03 - 10 F K xx C
1 2 3 4 5 6

1. Micro USB 3.0 SMT, Right Angle
2. No. of Contact: 10 Positions
3. Contact Type:
   F: Female Receptacle
4. Insulator Color:
   K: Black
5.Contact Plating:
   PG: Pa-Ni 30u"+Au 2u" on Contact Area
   and Au 3u" min. on Solder Tail
6. Shell Plating:
   C: Bright Tin

B Type 5P Socket, SMT, Right Angle for PCB

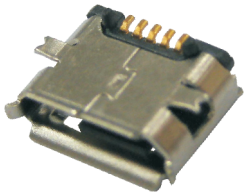

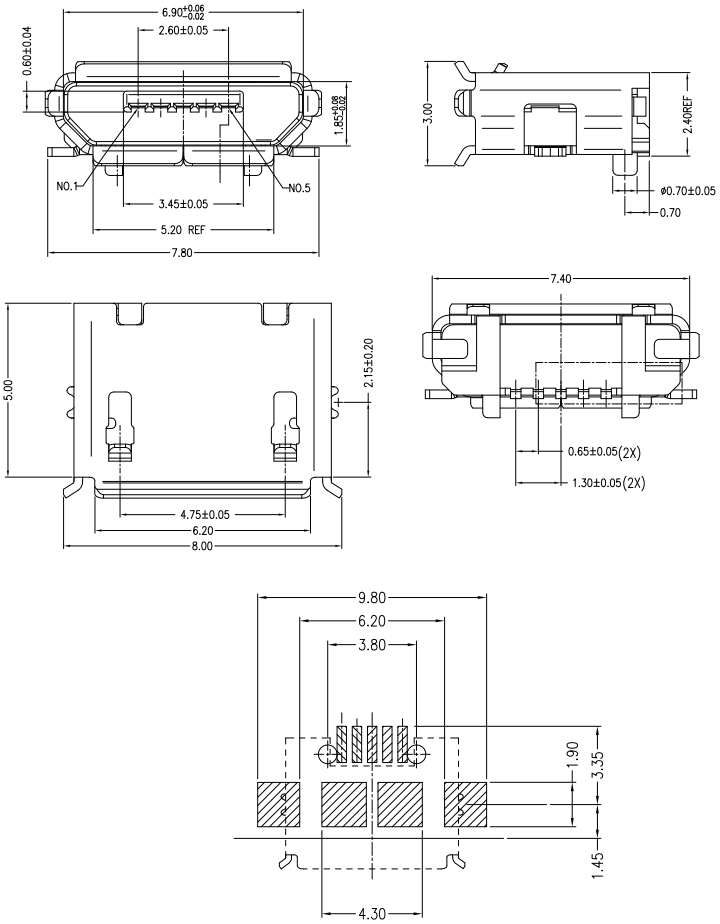

PART NO.
MMUBR03 - 5 F K 30 R 1
1 2 3 4 5 6 7

1. Micro USB B Type, SMT, R/A
2. No. of Contact: 5 Positions
3. Contact Type:
   F: Female Receptacle
4. Insulator Color:
   K: Black
5. Contact Plating:
   30: 30u" Gold
6. Package:
   R: Tape & Reel
7. Leave Blank:
   w/Locating Pegs
   w/o Locating Pegs

B Type 5P Socket, SMT, Vertical for PCB

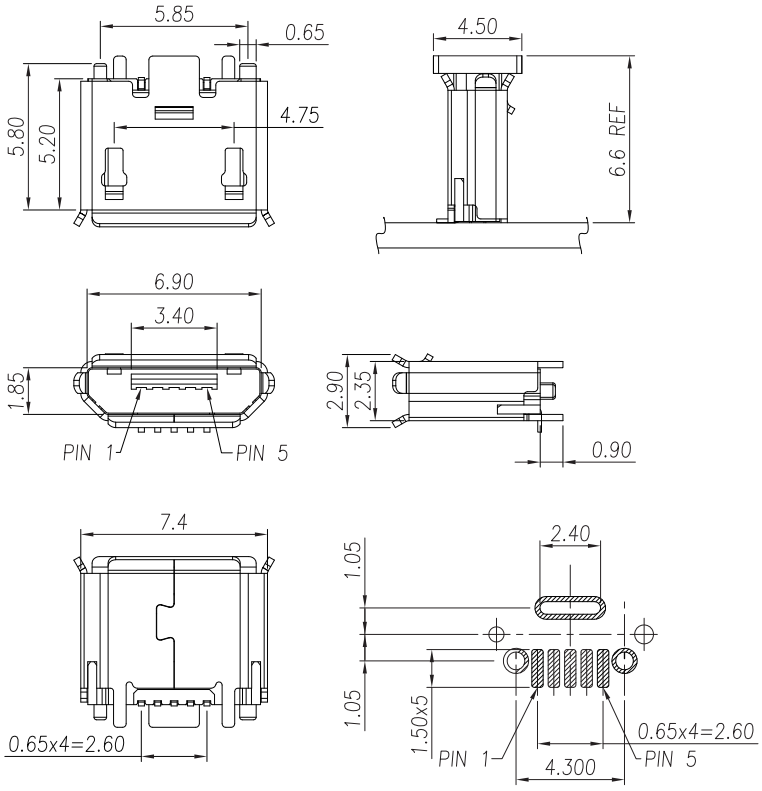

PART NO.
MMUBS03 - 5 F K 10 R
1 2 3 4 5

1. Micro USB B Type, SMT, Vertical
2. No. of Contact: 5 Positions
3. Contact Type:
   F: Female Receptacle
4. Insulator Color:
   K: Black
5. Contact Plating:
   10: 10u" Gold

AB Type 5P Socket, SMT, Right Angle for PCB

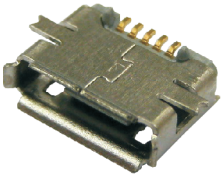

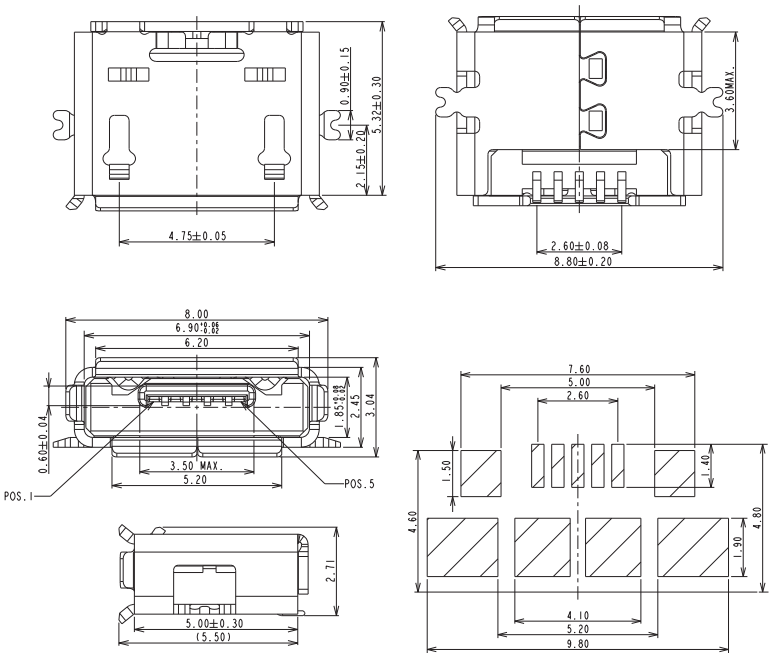

PART NO.

MMUCR03 - 5 F G 30 R 1

1 2 3 4 5 6 7

1. Micro USB AB Type, SMT, R/A
2. No. of Contact: 5 Positions
3. Contact Type:
   F: Female Receptacle
4. Insulator Color:
   G: Gray
5. Contact Plating:
   30: 30u" Gold
6. Package:
   R: Tape & Reel
7. Leave Blank:
   w/Locating Pegs
   w/o Locating Pegs

A Type 5P Plug for Cable Molding

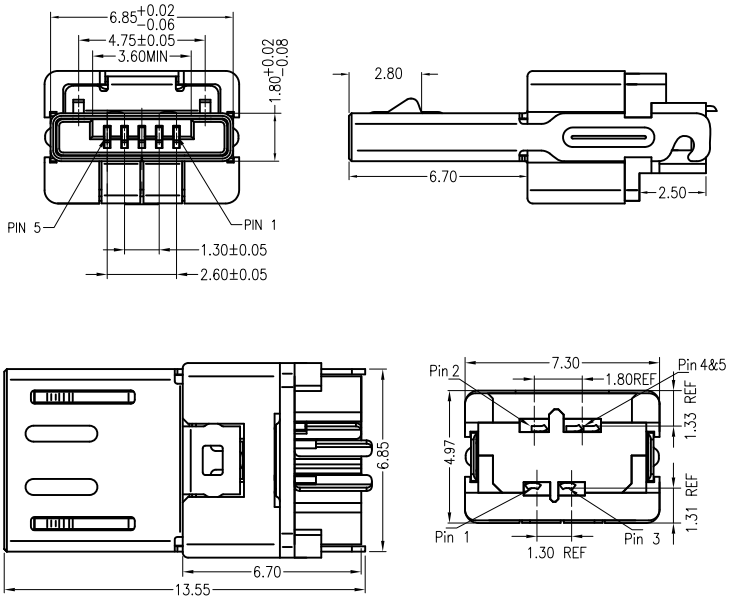

PART NO.

MMUA13 - 5 M W 30

1 2 3 4 5

1. Micro USB A Type, Wire Solder
2. No. of Contact: 5 Positions
3. Contact Type:
   M: Male Plug
4. Insulator Color:
   W: White
5. Contact Plating:
   30: 30u" Gold

B Type 5P Plug for Cable Molding

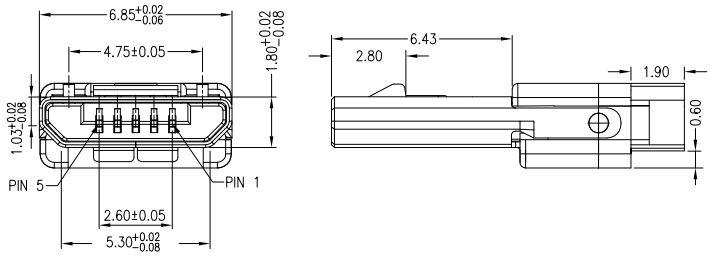

PART NO.

MMUB13 - 5 M K 30

1 2 3 4 5

1. Micro USB B Type, Wire Solder
2. No.of Contact: 5 Positions
3. Contact Type:
   M: Male Plug
4. Insulator Color:
   K: Black
5. Contact Plating:
   30: 30u” Gold

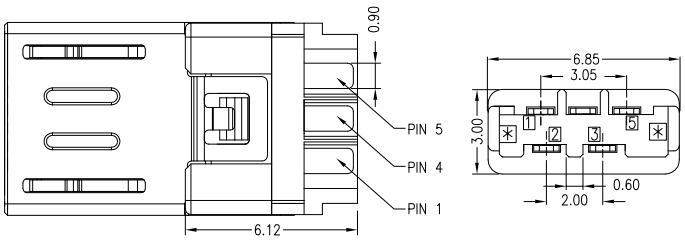

B Type 5P Socket, SMT, Right Angle for PCB

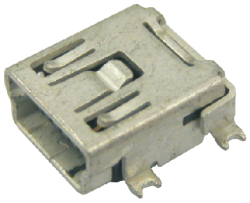

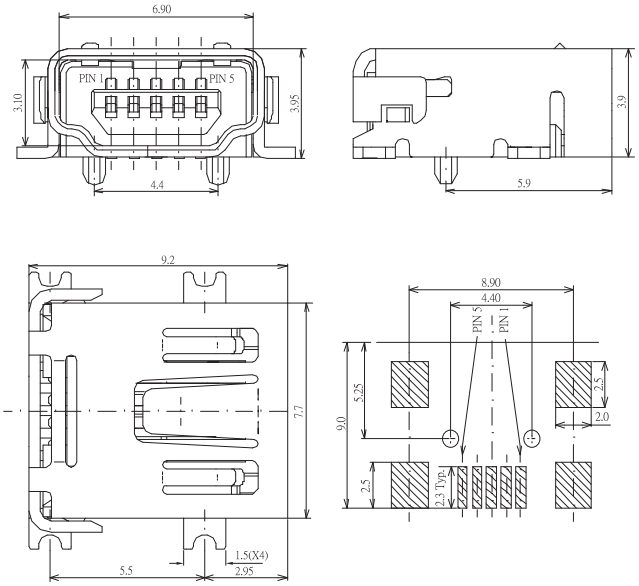

PART NO.
MUSBB 5 F 03 01 K 30
1 2 3 4 5 6 7

1. Mini USB B Type
2. No. of Contact: 5 Positions
3. Contact Type:
   F: Female Receptacle
4. 03: SMT
5. 01: Right Angle
6. Insulator Color:
   K: Black
7. Contact Plating:
   30: 30u" Gold

B Type 5P Socket, SMT, Vertical for PCB

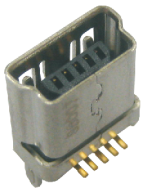

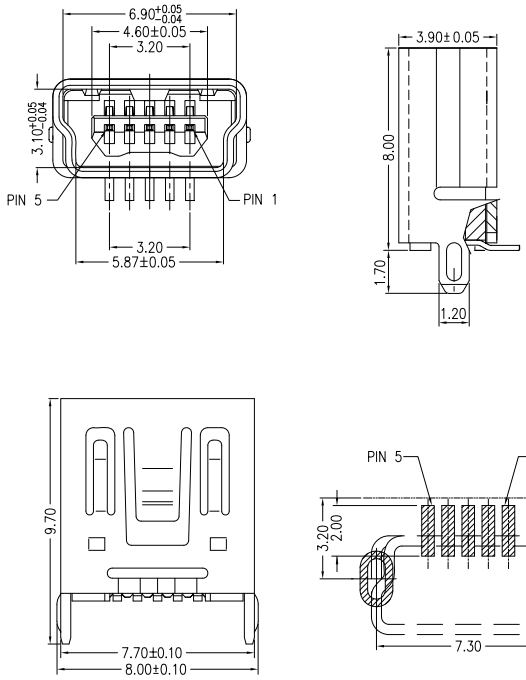

PART NO.
MUBS03 - 5 F K 30 J R
1 2 3 4 5 6 7

1. Mini USB B Type, SMT, Vertical
2. No. of Contact: 5 Positions
3. Contact Type:
   F: Female Receptacle
4. Insulator Color:
   K: Black
5. Contact Plating:
   30: 30u" Gold
6. Shell Plating:
   J: Nickel Plating
7. Package:
   R: Tape & Reel

B Type 5P Socket, Through Hole, Right Angle for PCB

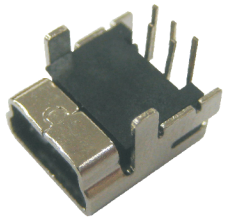

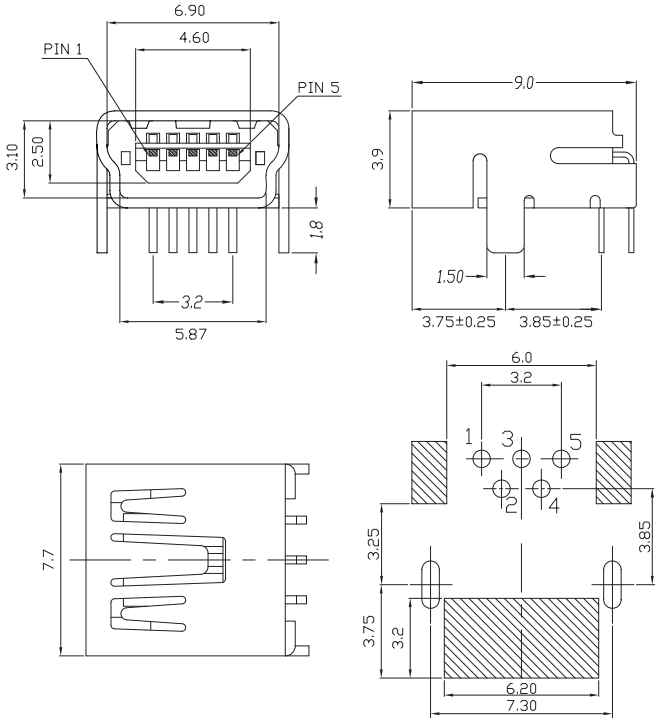

PART NO.
MUSBB 5 F 01 01 K 30
1 2 3 4 5 6 7

1. Mini USB B Type
2. No. of Contact: 5 Positions
3. Contact Type:
   F: Female Receptacle
4. 01: Through Hole
5. 01: Right Angle
6. Insulator Color:
   K: Black
7. Contact Plating: 30u" Gold

B Type 5P Socket, Through Hole, Vertical for PCB

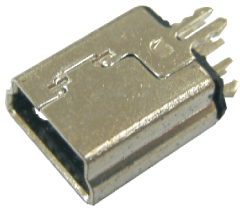

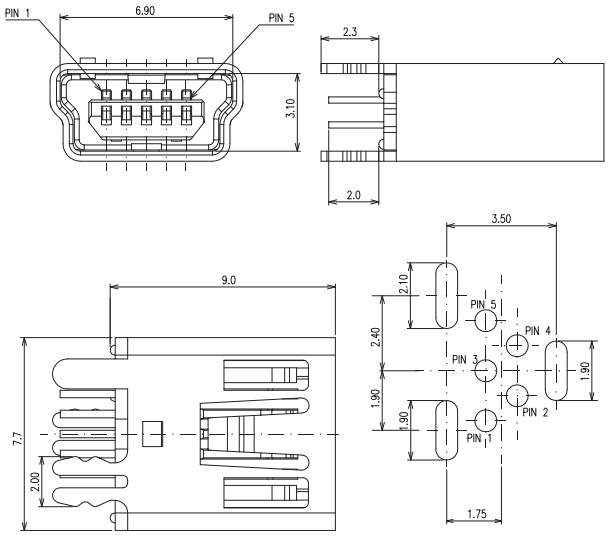

PART NO.
MUSBB 5 F 01 02 K 30 H
1 2 3 4 5 6 7 8

1. Mini USB B Type
2. No. of Contact: 5 Positions
3. Contact Type:
   F: Female Receptacle
4. 01: Through Hole
5. 02: Vertical
6. Insulator Color:
   K: Black
7. Contact Plating:
   30: 30u" Gold
8. Blank: Standard PBT
   H: High Temp: PA-9T

B Type 5P Plug for Cable Molding

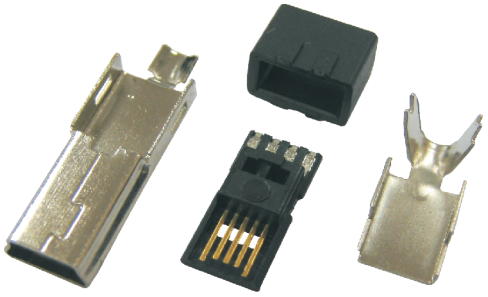

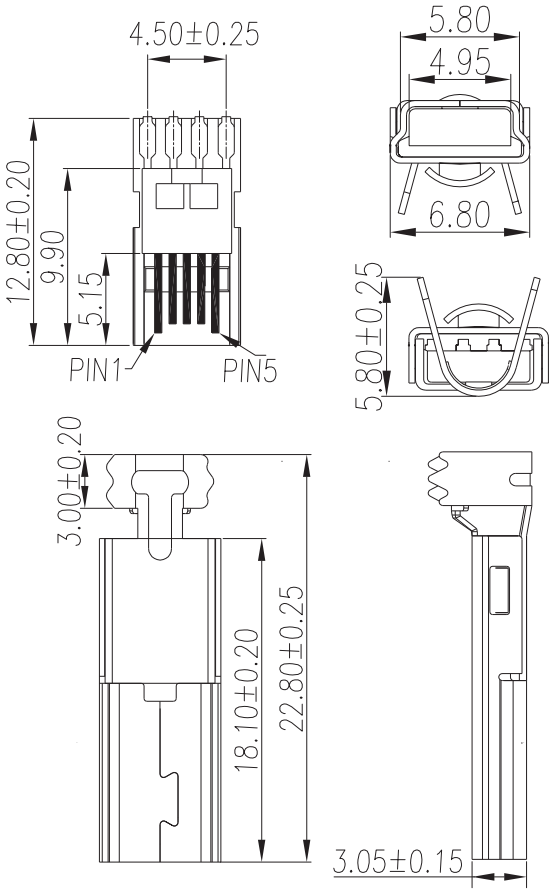

PART NO.
MUSBB 5 M 01 K 30
1 2 3 4 5 6

1. Mini USB B Type
2. No. of Contact: 5 Positions
3. Contact Type:
   M: Male Plug
4. 01: Wire Soldering
5. Insulator Color:
   K: Black
6. Contact Plating:
   05: 5u" Gold
   30: 30u" Gold

B Type 5P Plug, Through Hole, R/A for PCB

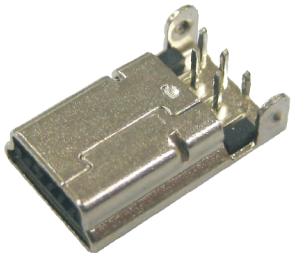

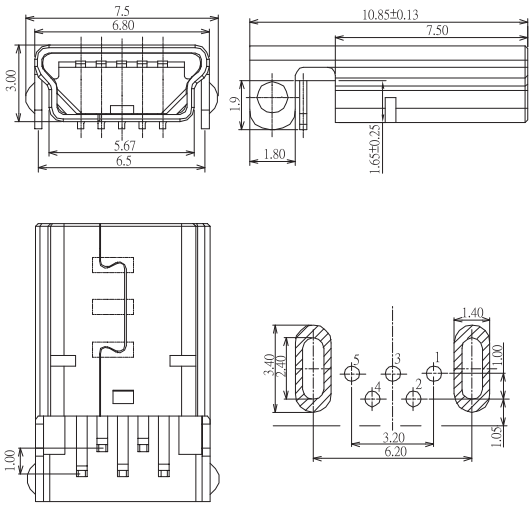

PART NO.
MUSBB 5 M 01 01 K 30
1 2 3 4 5 6 7

1. Mini USB B Type
2. No. of Contact: 5 Positions
3. Contact Type:
   M: Male Plug
4. 01: Through Hole
5. 01: Right Angle
6. Insulator Color:
   K: Black
7. Contact Plating:
   30: 30u" Gold

A Type 4P Plug for Cable Molding or Assembly

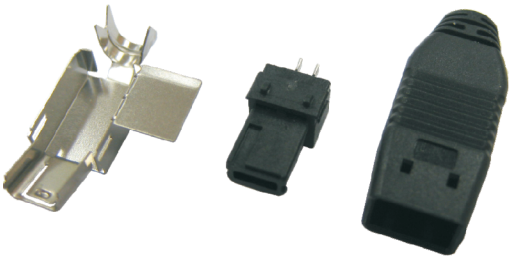

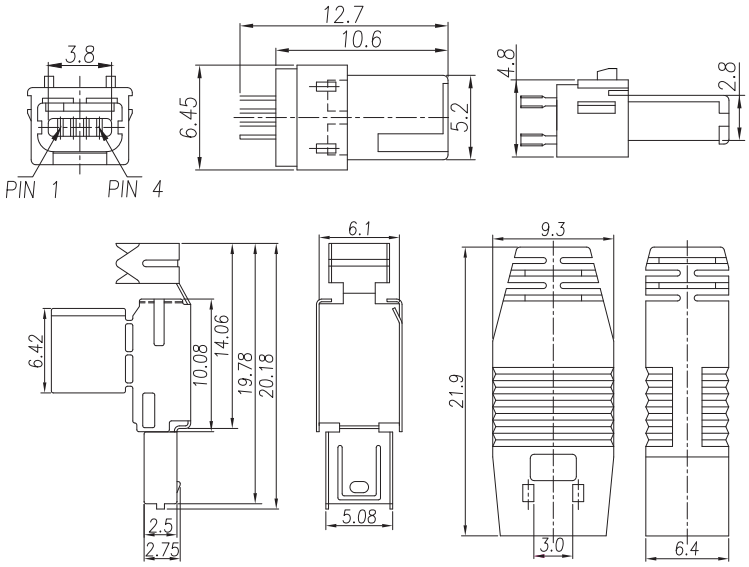

PART NO.
MUSBA 4 M 01 K 15 - A
1 2 3 4 5 6 7

1. Mini USB A Type
2. No. of Contact: 4 Positions
3. Contact Type:
   M: Male Plug
4. 01: Wire Soldering
5. Insulator Color:
   K: Black
6. Contact Plating:
   01: Gold Flash
   15: 15u" Gold
7. A: with Hood

A Type 4P Socket, SMT, Right Angle for PCB

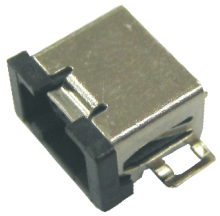

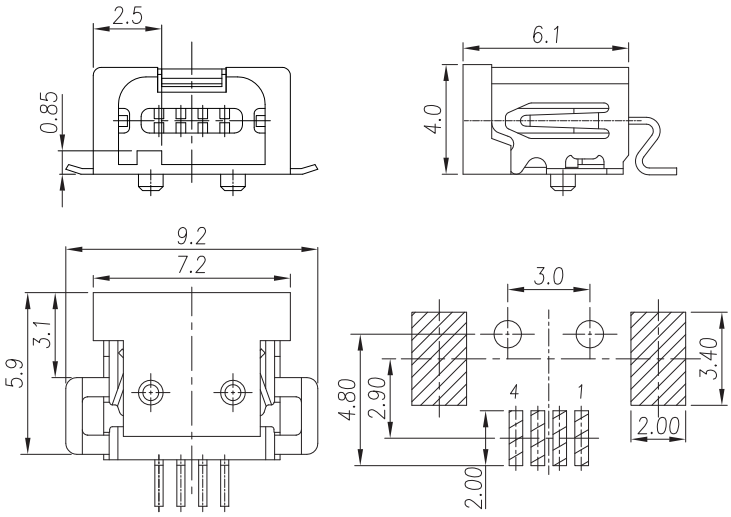

PART NO.
MUSBA 4 F 03 01 K 10
1 2 3 4 5 6 7

1. Mini USB A Type
2. No. of Contact: 4 Positions
3. Contact Type:
   F: Female Receptacle
4. 03: SMT
5. 01:Right Angle
6. Insulator Color:
   K: Black
7. Contact Plating:
   10: 10u" Gold
   30: 30u" Gold

B Type 4P Socket, SMT, Right Angle for PCB

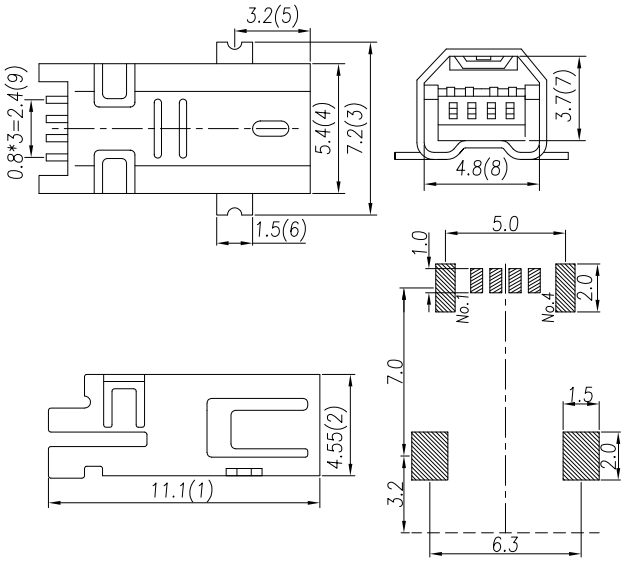

PART NO.
MUSBB 4 F 03 01 K 15
1 2 3 4 5 6 7

1. Mini USB B Type
2. No. of Contact: 4 Positions
3. Contact Type:
   F: Female Receptacle
4. 03: SMT
5. 01: Right Angle
6. Insulator Color:
   K: Black
7. Contact Plating:
   05: 05u" Gold
   30: 30u" Gold

B Type 4P Plug for Cable Molding

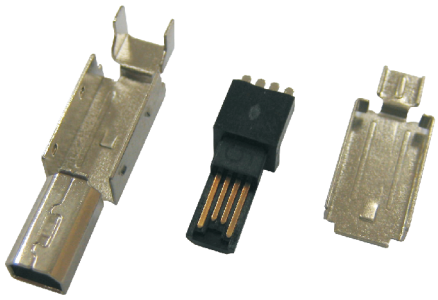

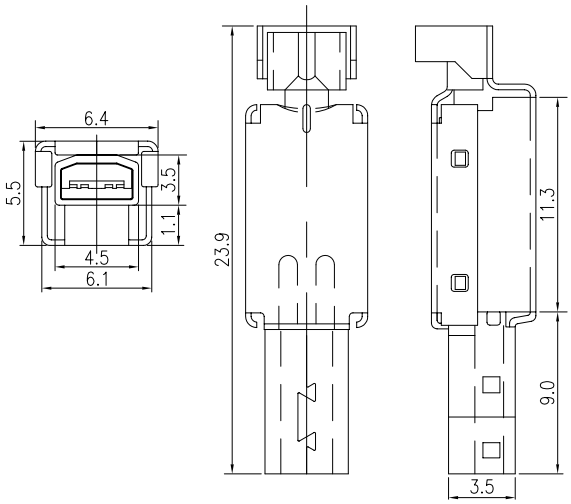

PART NO.
MUSBB 4 M 01 K xx
1 2 3 4 5 6

1. Mini USB B Type
2. No. of Contact: 4 Positions
3. Contact Type:
   M: Male Plug
4. 01: Wire Soldering
5. Insulator Color:
   K: Black
6. Contact Plating:
   05: 05u" Gold
   30: 30u" Gold

B Type 8P Socket, SMT, Right Angle for PCB

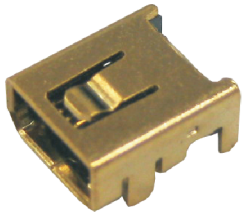

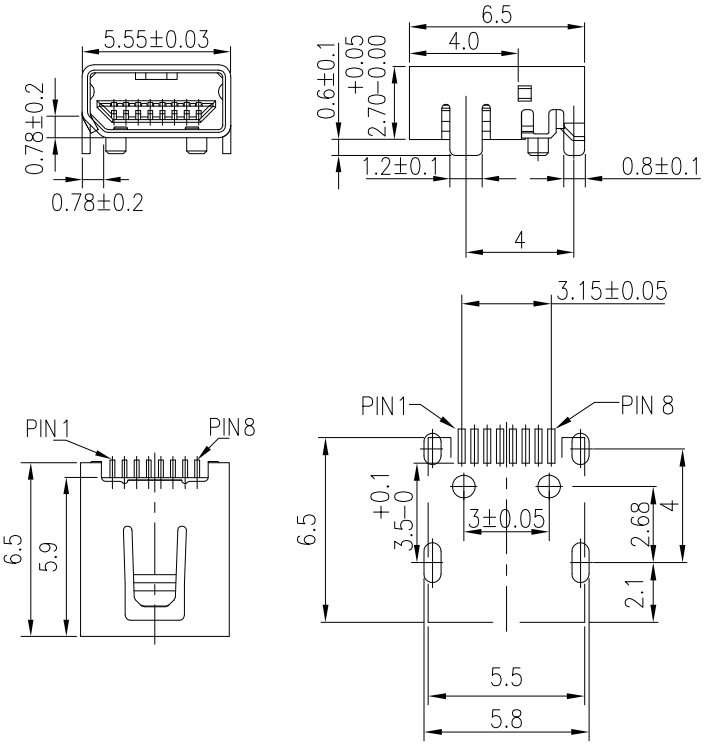

PART NO.
MUSBB 8 F 03 01 K xx G
1 2 3 4 5 6 7 8

1. Mini USB B Type
2. No. of Contact: 8 Positions
3. Contact Type:
   F: Female Receptacle
4. 03: SMT
5. 01:Right Angle
6. Insulator Color:
   K: Black
7. Contact Plating:
   05: 05u" Gold ... 30: 30u" Gold
8. Shell Plating: G: Flash Gold

B Type 8P Plug for Cable Molding

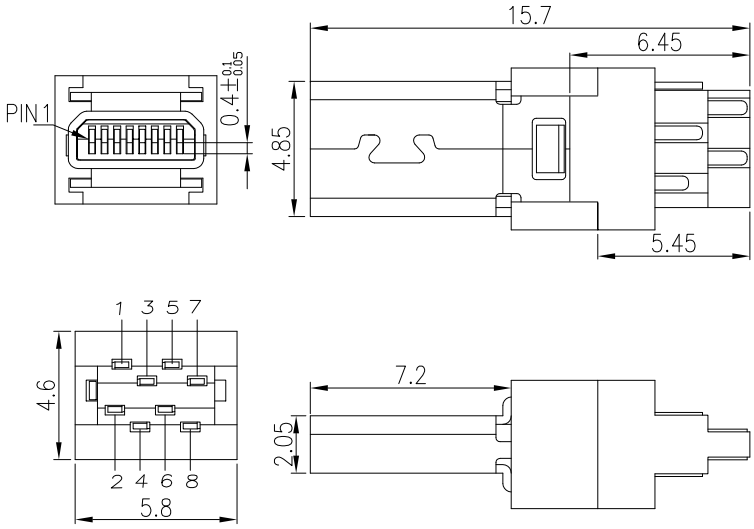

PART NO.
MUSBB 8 M 01 K 10
1 2 3 4 5 6

1. Mini USB B Type
2. No. of Contact: 8 Positions
3. Contact Type:
   M: Male Plug
4. 01: Solder Type
5. Insulator Color:
   K: Black
6. Contact Plating:
   10: 10u" Gold
   30: 30u" Gold

A Type 4P Socket, Through Hole, Right Angle for PCB

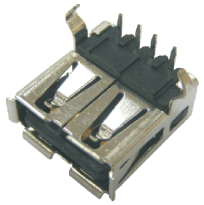

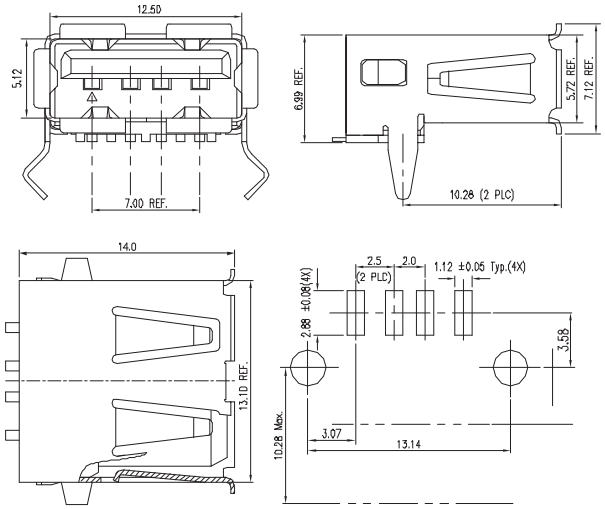

PART NO.
UAR01B - 4 F x x J
1 2 3 4 5 6

1. USB A , Through Hole, Right Angle, w/Back Shield
2. No. of Contact: 4 Positions
3. Contact Type:
   F: Female Receptacle
4. Insulator Color:
   W: White
   K: Black
5. Contact Plating:
   03: 03u" Gold
   30: 30u" Gold
6. Shell Plating:
   J: Nickel

A Type 4P Socket, Through Hole, Right Angle Middle Mount for PCB

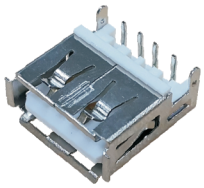

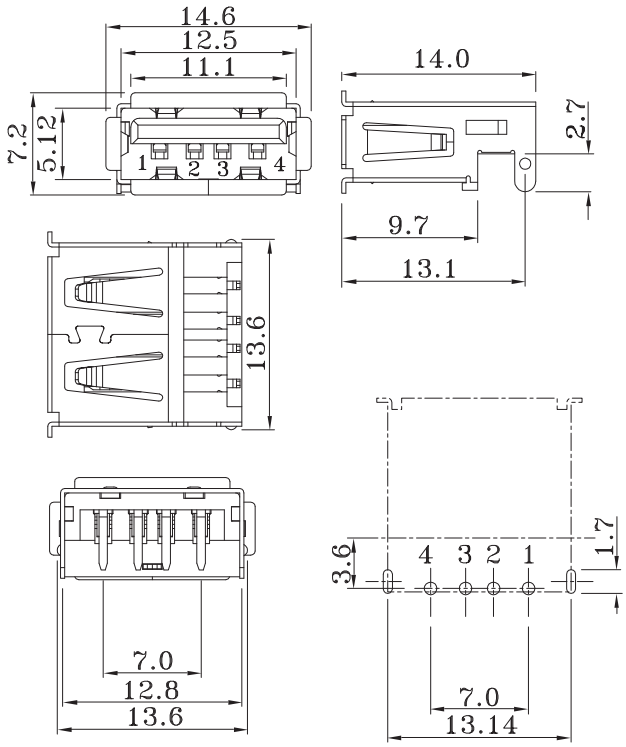

PART NO.
UAR01LB - 4 F x 03 J
1 2 3 4 5 6

1. USB A, Through Hole, Right Angle, PCB Edge
2. No. of Contact: 4 Positions
3. Contact Type:
   F: Female Receptacle
4. Insulator Color:
   W: White
   K: Black
5. Contact Plating:
   03: 03u" Gold
   30: 30u" Gold
6. Shell Plating:
   J: Nickel

A Type 4P Socket, Through Hole, Vertical for PCB

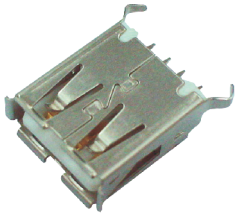

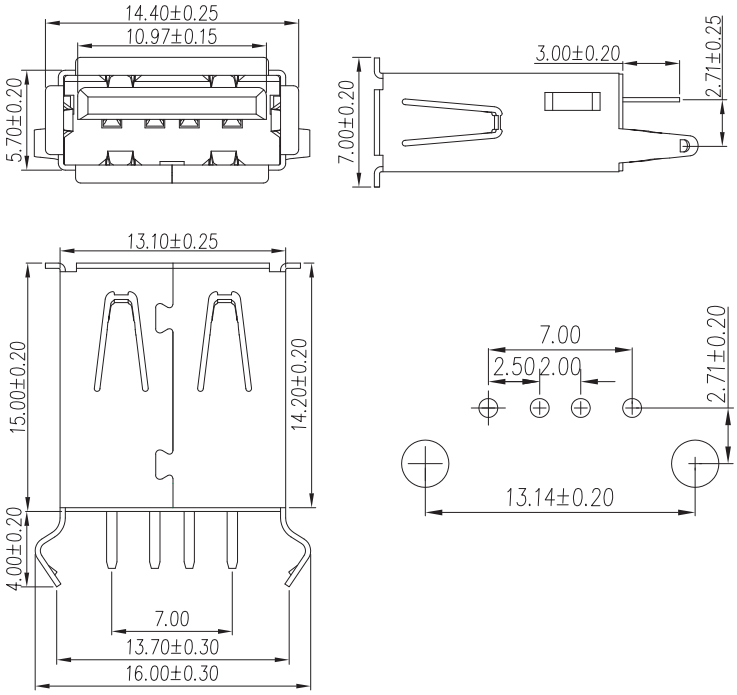

PART NO.
UAS02 - 4 F W 03 J
1 2 3 4 5 6

1. USB A, Through Hole, Vertical
2. No. of Contact: 4 Positions
3. Contact Type:
   F: Female Receptacle
4. Insulator Color:
   W: White
   K: Black
5. Contact Plating:
   03: 3u" Gold
   30: 30u" Gold
6. Shell Plating:
   J: Nickel
   C: Bright Tin

A Type 4P Socket, Through Hole, Upright for PCB

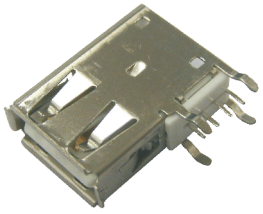

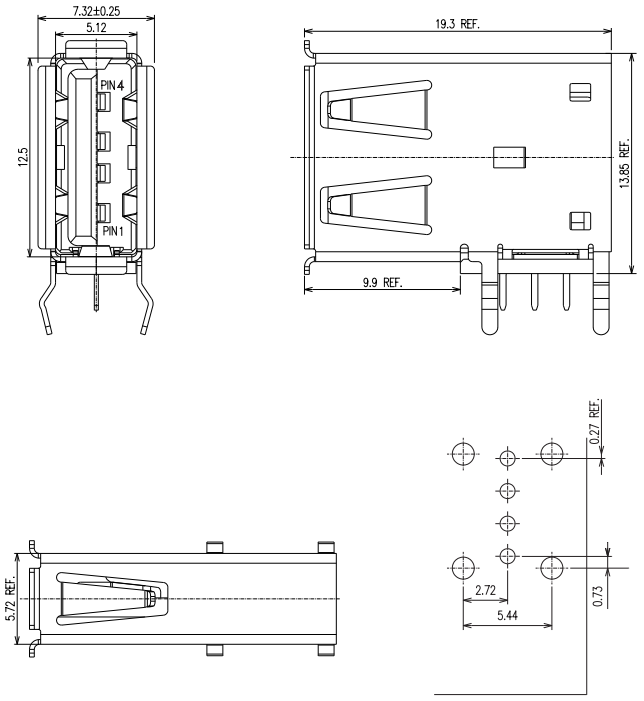

PART NO.
UAR04 - 4 F K xx J - 2
1 2 3 4 5 6

1. USB A, Through Hole, Upright
2. No. of Contact: 4 Positions
3. Contact Type:
   F: Female Receptacle
4. Insulator Color:
   K: Black
   W: White
5. Contact Plating:
   01: 1u" Gold
   15: 15u" Gold
   30: 30u" Gold
6. Shell Plating:
   J: Nickel

A Type 4P Socket, Through Hole, Upright, Slim Type for PCB

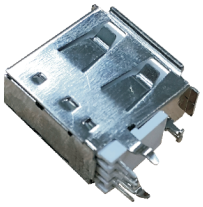

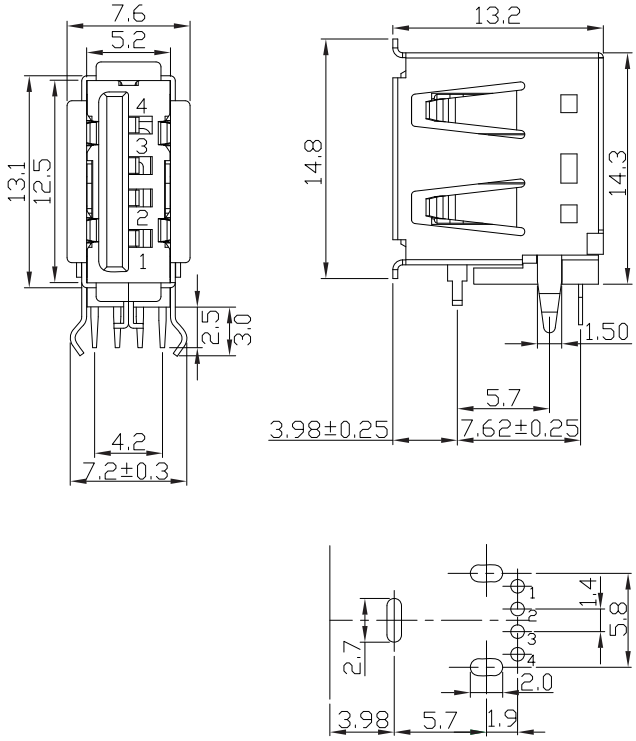

PART NO.

UAR04 - 4 F K 03 J S
1 2 3 4 5 6 7

1. USB A , Through Hole, Up-Right
2. No. of Contact: 4 Positions
3. Contact Type:
   F: Female Receptacle
4. Insulator Color:
   K: Black
   W: White
5. Contact Plating:
   03: 3u" Flash Gold
   30: 30u" Gold
6. Shell Plating:
   J: Nickel
7. S: Short Body Type

A Type 4P Socket, SMT, Right Angle for PCB

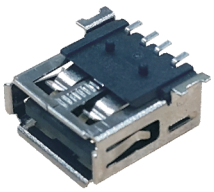

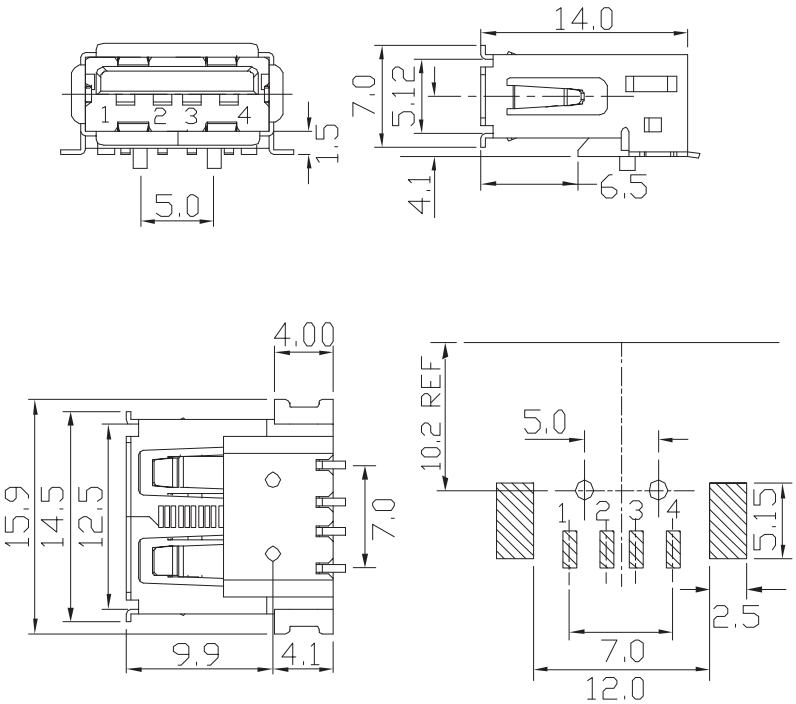

PART NO.

UAR03 - 4 F W 03 J - 3 R
1 2 3 4 5 6 7

1. USB A , SMT, Right Angle
2. No. of Contact: 4 Positions
3. Contact Type:
   F: Female Receptacle
4. Insulator Color:
   W: White
   K: Black
5. Contact Plating:
   03: 3u" Flash Gold
   30: 30u" Gold
6. Shell Plating:
   J: Nickel
7. Package:
   Blank: PVC Tray
   R: Tape & Reel

A Type 4P Socket for Wire Solder

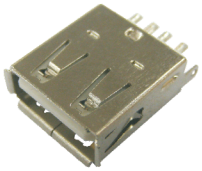

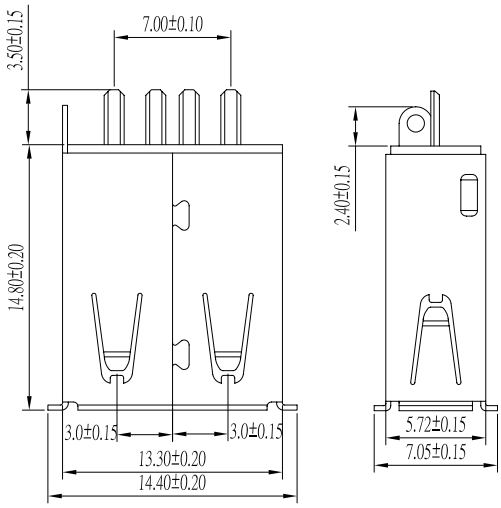

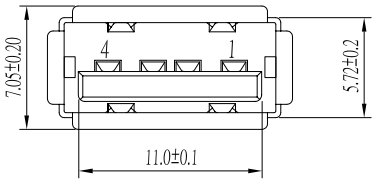

PART NO.
UAS11 - 4 F X XX X
1 2 3 4 5 6

1. UAS11: USB A, Wire Solder
2. No. of Contact: 4 Positions
3. Contact Type:
   F: Female Receptacle
4. Insulator Color:
   W: White
   K: Black
5. Contact Plating:
   03: 3u" Flash Gold
   30: 30u" Gold
6. Shell Plating:
   J: Nickel

A Type 4P Socket with Additional Metal Cover for Wire Solder

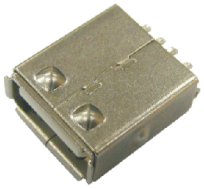

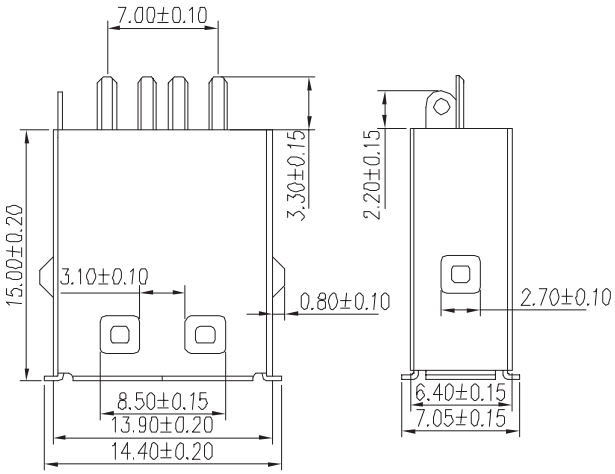

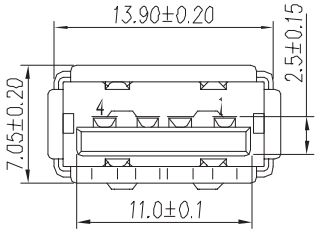

PART NO.
UAS11B - 4 F X XX X
1 2 3 4 5 6

1. USB A, Wire Solder, w/Metal Cover
2. No. of Contact: 4 Positions
3. Contact Type:
   F: Female Receptacle
4. Insulator Color:
   W: White
   K: Black
5. Contact Plating:
   03: 3u" Flash Gold
   30: 30u" Gold
6. Shell Plating:
   J: Nickel

A Type 4P Socket, Double Deck, Through Hole for PCB

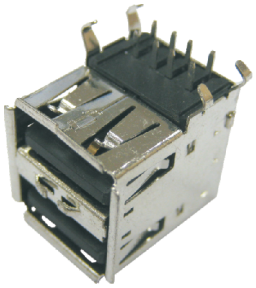

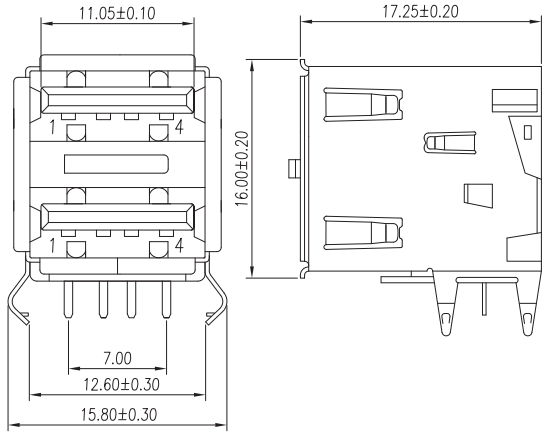

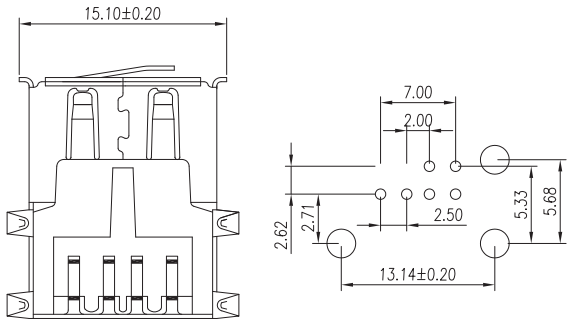

PART NO.
UAR01B - 4 F x 2 - 2K xx J
1 2 3 4 5 6

1. USB A, Receptacle, Right Angle, Double Deck w/Back Shield
2. No. of Contact: 4 Positions
3. Contact Type:
   F: Female Receptacle
4. Insulator Color:
   K: Black
   W: White
5. Contact Plating:
   03: 3u" Gold Plating
   30: 30u" Gold Plating
6. Shell Plating:
   J: Nickel

A Type 4P Socket 2 Deck, Through Hole, Vertical for PCB

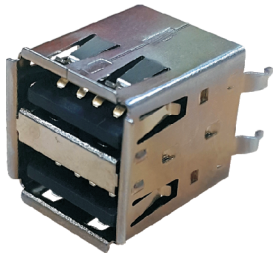

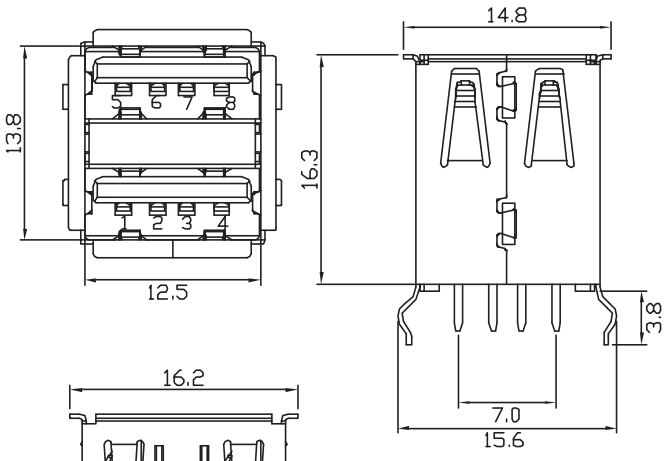

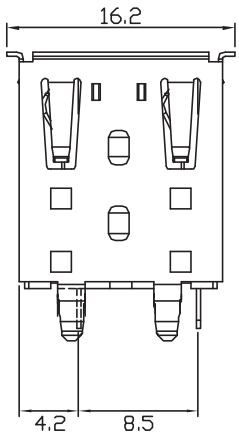

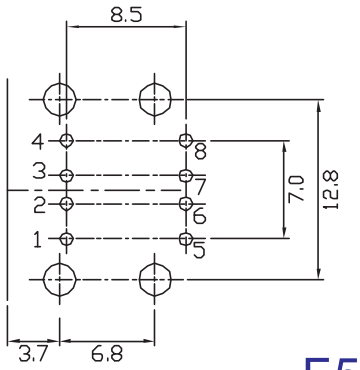

PART NO.
UAS02 - 4 F x 2 x xx J
1 2 3 4 5 6 7

1. USB A Through Hole, Vertical
2. No. of Contact: 4 Positions
3. Contact Type:
   F: Female Receptacle
4. Double Deck
5. Insulator Color:
   W: White
   K: Black
6. Contact Plating:
   03: 3u" Gold
   30: 30u" Gold
7. Shell Plating:
   J: Nickel

A Type 4P Socket 3 Deck, Through Hole, Right Angle for PCB

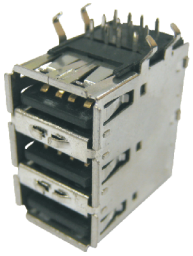

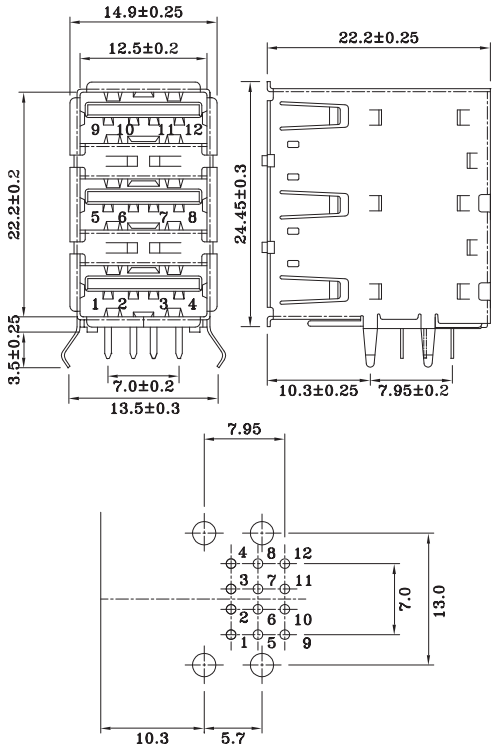

PART NO.
UAR01 - 4 F x 3 K xx J
1 2 3 4 5 6 7

1. USB A Through Hole, Right Angle
2. No. of Contact: 4 Positions
3. Contact Type:
   F: Female Receptacle
4. Triple Deck
5. Insulator Color:
   K: Black
6. Contact Plating:
   03: 3u" Gold
   30: 30u" Gold
6. Shell Plating:
   J: Nickel

A Type 4P Socket 4 Deck, Through Hole, Right Angle for PCB

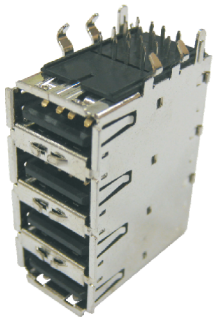

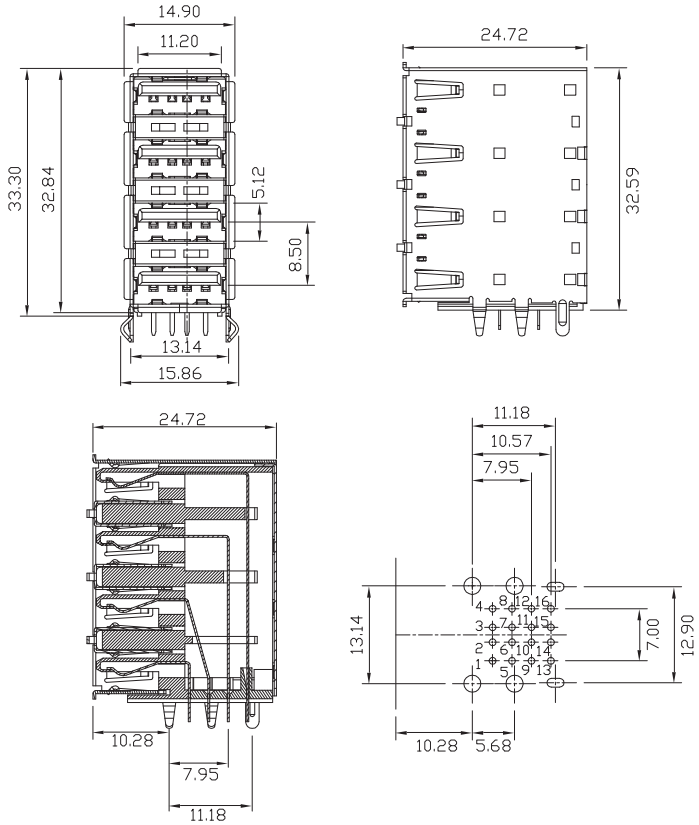

PART NO.
UAR01 - 4 F x 4 K xx J
1 2 3 4 5 6 7

1. USB A Through Hole, Right Angle
2. No. of Contact: 4 Positions
3. Contact Type:
   F: Female Receptacle
4. Four Deck
5. Insulator Color:
   K: Black
6. Contact Plating:
   03: 3u" Gold
   30: 30u" Gold
7. Shell Plating:
   J: Nickel

A Type 4P Plug, Through Hole, Right Angle for PCB

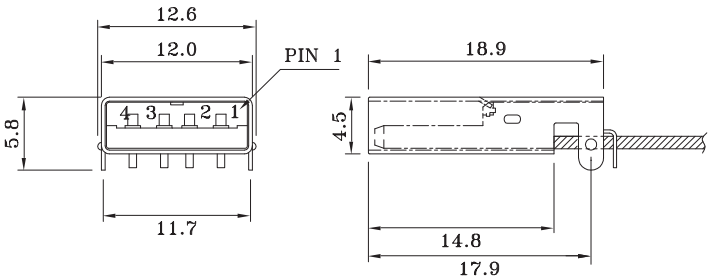

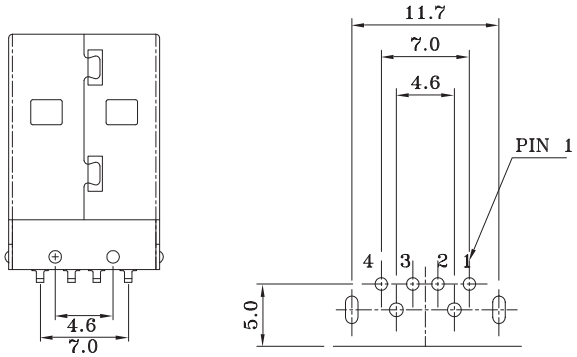

PART NO.
USBA 4 M 01 01 x x
1 2 3 4 5 6 7

1. USB A, Through Hole, Right Angle
2. No.of Contact: 4 Positions
3. Contact Type:
   M: Male Plug
4. Through Hole
5. Right Angle
6. Insulator Color:
   N: White
   K: Black
7. Contact Plating:
   05: 5u" Gold
   30: 30u" Gold

A Type 4P Plug, SMT, Right Angle for PCB

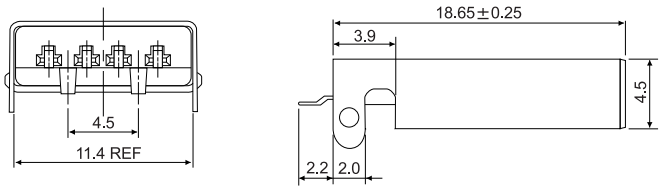

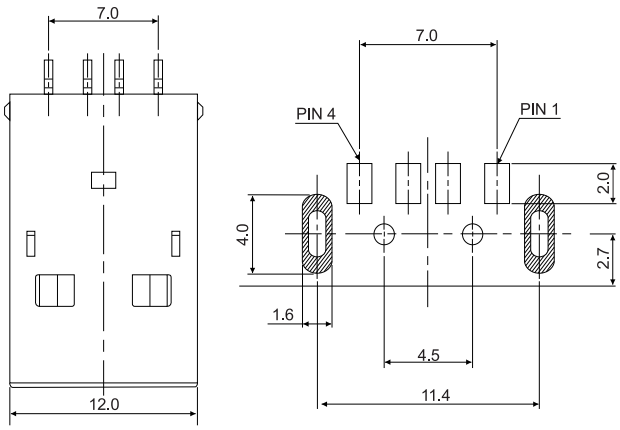

PART NO.
USB A 4 M 03 01 N - 2 x 05 0
1 2 3 4 5 6 7 8

1. USB A
2. No.of Contact: 4 Positions
3. Contact Type:
   M: Male Plug
4. 03: SMT
5. 01: Right Angle
6. Insulator Color:
   N: White
   K: Black
7. Contact Plating:
   05: 5u" Gold
   30: 30u" Gold
8. Post Diameter:
   0: ⌀1.1 Blank: ⌀1.5

Standard Shell Plating: Nickel

A Type 4P Plug, SMT, Right Angle Middle Mount for PCB

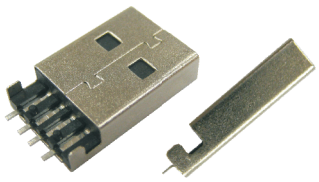

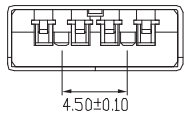

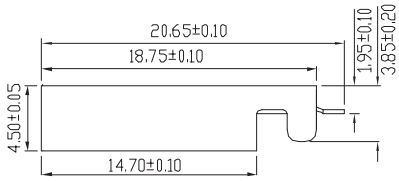

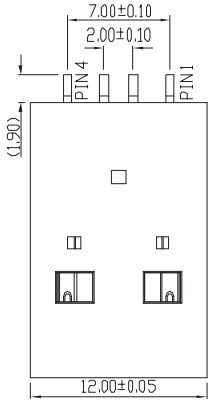

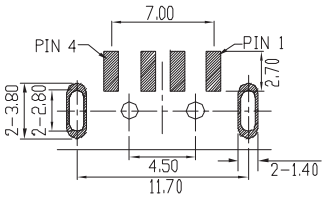

PART NO.
UAR03LB - 4 M K xx
1 2 3 4 5

1. USB A, SMT, Right Angle, PCB Edge
2. No. of Contact: 4 Positions
3. Contact Type:
   M: Male Plug
4. Insulator Color:
   K: Black
   W: White
5. Contact Plating:
   03: 3u" Gold
   30: 30u" Gold

A Type 4P Plug, Solder for Cable Molding

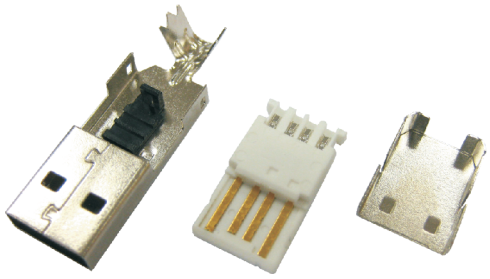

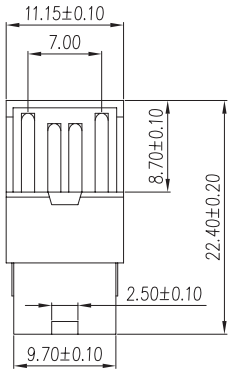

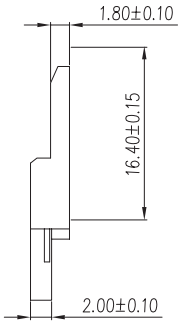

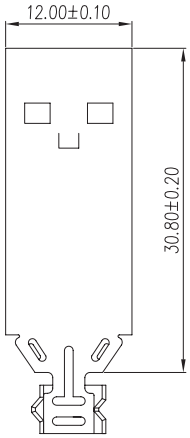

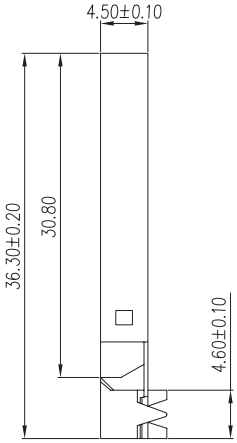

PART NO.
USBA4M01 W 05 S
1 2 3 4

1. USB A, 4P Plug, Wire Solder
2. Insulator Color:
   W: White
   K: Black
3. Contact Plating:
   05: 5u" Gold
   30: 30u" Gold
4. S: Short Body
   Blank: Standard

B Type 4P Socket, Through Hole, Right Angle Back Open for PCB

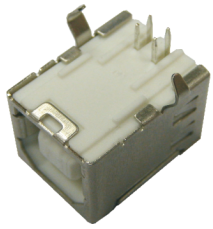

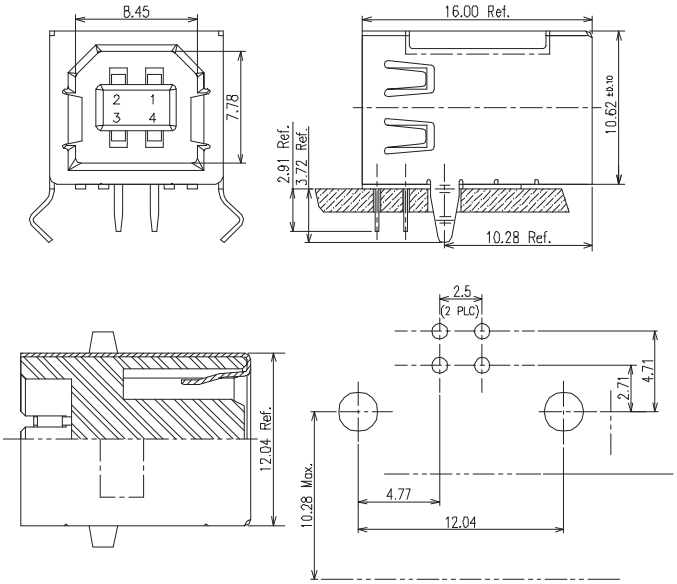

PART NO.
UBR01 - 4 F W 05 J
1 2 3 4 5 6

1. USB B, Through Hole, Right Angle
2. No. of Contact: 4 Positions
3. Contact Type:
   F: Female Receptacle
4. Insulator Color:
   W: White
   K: Black
5. Contact Plating:
   05: 5u" Gold
   30: 30u" Gold
6. Shell Plating:
   J: Nickel

B Type 4P Socket, Through Hole, Right Angle with Back Shield for PCB

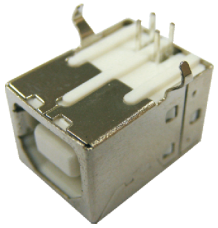

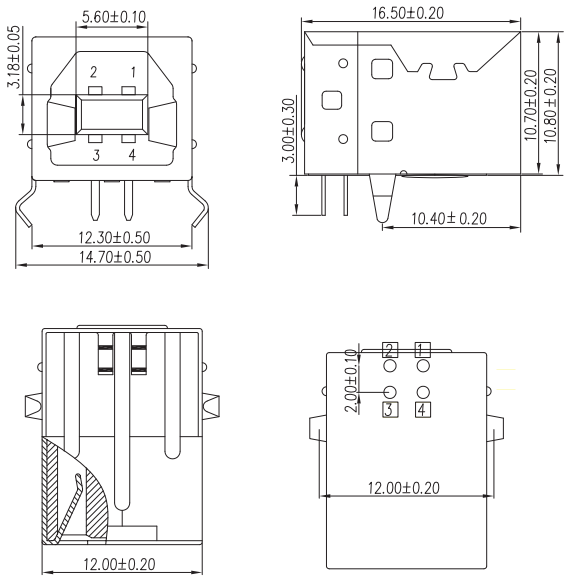

PART NO.
UBR01B - 4 F W 03 J
1 2 3 4 5 6

1. USB B, Through Hole, Right Angle with Back Shield
2. No. of Contact: 4 Positions
3. Contact Type:
   F: Female Receptacle
4. Insulator Color:
   W: White
   K: Black
5. Contact Plating:
   03: 3u" Gold
   30: 30u" Gold
6. Shell Plating:
   J: Nickel

B Type 4P Socket, Through Hole, Right Angle with Top Flange for PCB

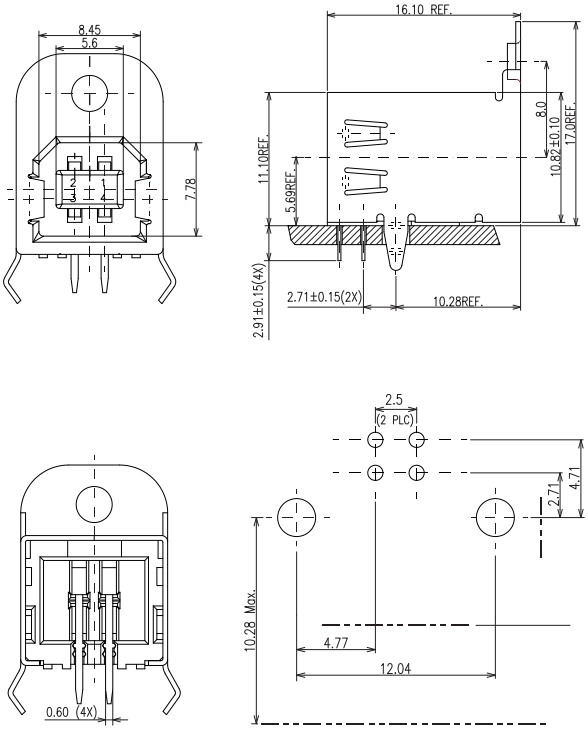

PART NO.
UBR01G - 4 F W 05 J
1 2 3 4 5 6

1. USB B, Through Hole, Right Angle, w/Flange
2. No. of Contact: 4 Positions
3. Contact Type:
   F: Female Receptacle
4. Insulator Color:
   W: White
   K: Black
5. Contact Plating:
   05: 5u" Gold
   30: 30u" Gold
6. Shell Plating:
   C: Bright Tin
   J: Nickel

B Type 4P Socket, Through Hole, Vertical for PCB

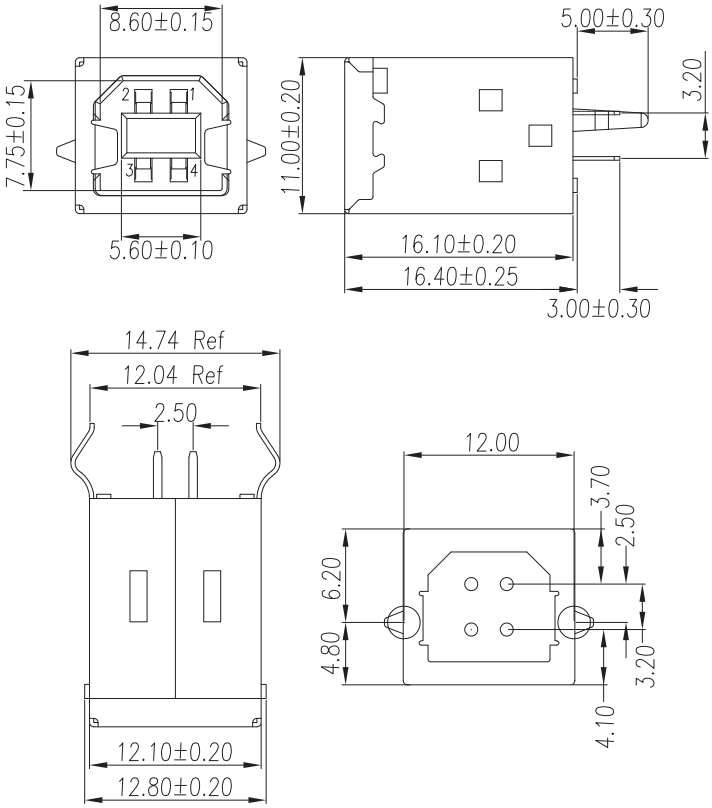

PART NO.
UBS02 - 4 F W 03 J
1 2 3 4 5 6

1. USB B, Through Hole, Vertical
2. No. of Contact: 4 Positions
3. Contact Type:
   F: Female Receptacle
4. Insulator Color:
   W: White
   K: Black
5. Contact Plating:
   03: 3u" Gold
6. Shell Plating:
   J: Nickel

B Type 4P Socket, SMT, Right Angle for PCB

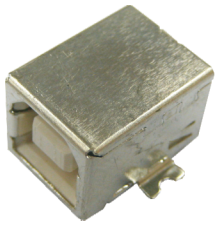

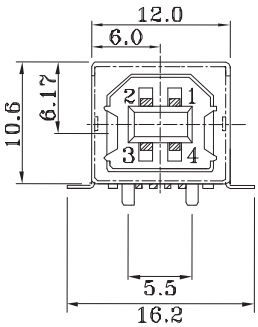

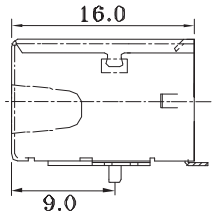

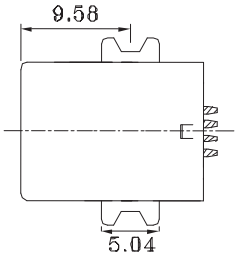

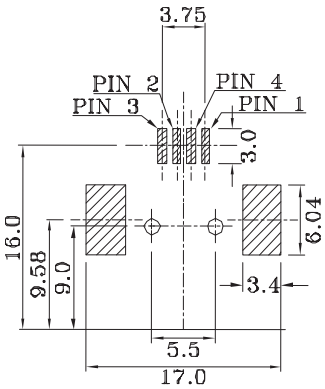

PART NO.
UBR03 - 4 F W 01 J - 2 R
1 2 3 4 5 6 7

1. USB B Type, SMT, Right Angle
2. No. of Contact: 4 Positions
3. Contact Type:
   F: Female Receptacle
4. Insulator Color:
   W: White
   K: Black
5. Contact Plating:
   01: Gold Flash
   30: 30u" Gold
6. Shell Plating:
   J: Nickel
7. Packing:
   R: Tape & Reel

B Type 4P Socket, SMT, Vertical for PCB

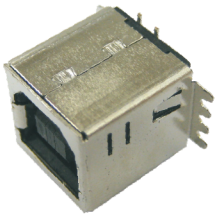

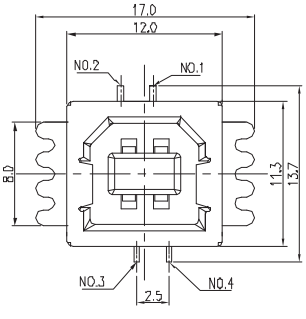

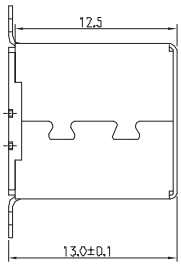

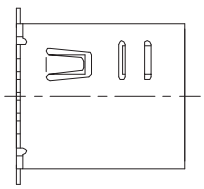

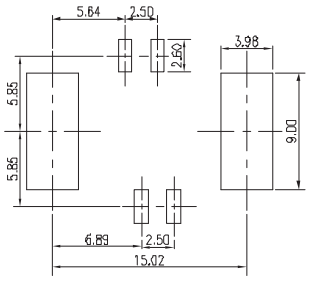

PART NO.
UBS03 - 4 F K XX C R
1 2 3 4 5 6 7

1. USB B, SMT, Vertical
2. No. of Contact: 4 Positions
3. Contact Type:
   F: Female Receptacle
4. Insulator Color:
   K: Black
5. Contact Plating:
   05: 5u" Gold
   30: 30u" Gold
6. Shell Plating:
   C: Tin J: Nickel
7. Packing:
   R: Tape & Reel

B Type 4P Plug, Solder for Cable Molding

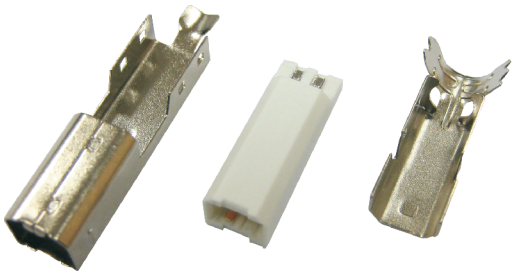

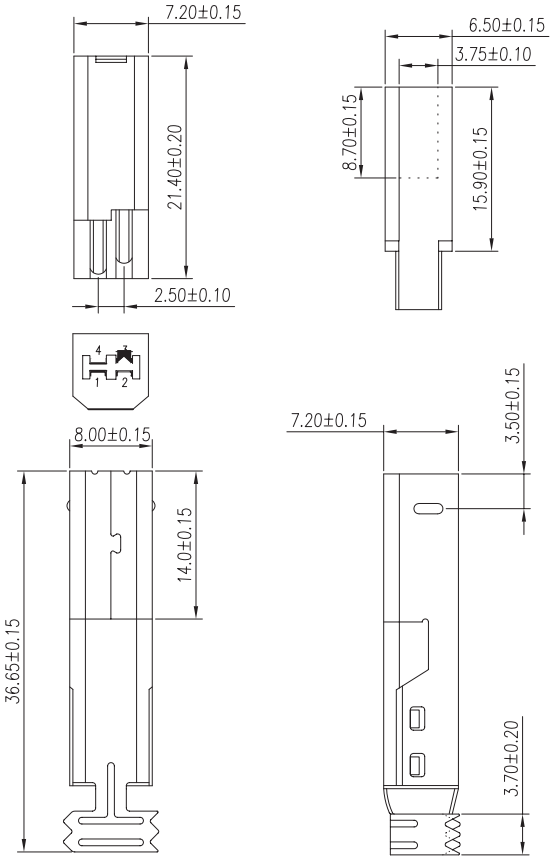

PART NO.
USBB4M 01 W 01 S
1 2 3 4 5

1. USB B, 4P Plug
2. 01: Wire Soldering
3. Insulator Color:
   W: White
   K: Black
4. Contact Plating:
   01: 01u" Gold
   05: 05u" Gold
   30: 30u" Gold
5. S: Short Body Shell

A,B Type Receptacle Dust Cover

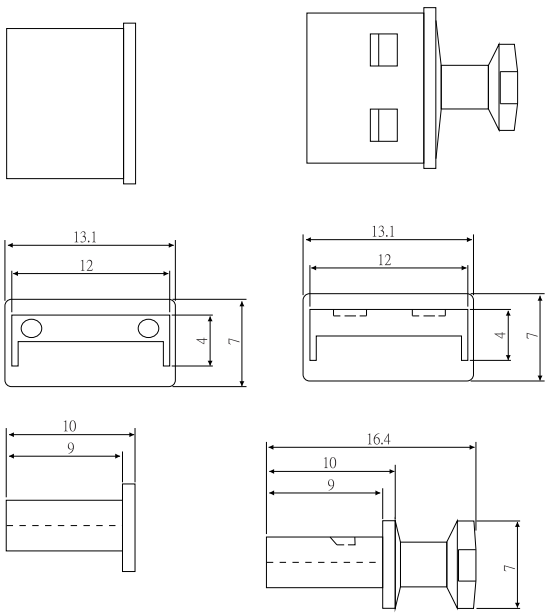

PART NO.
ACS - U x F x xx
1 2 3

1. USB Type: A, B
2.Color:
   K: Black
   G: Grey
3. 01: w/ Holder
   02: w/o Holder

19P Socket, SMT, Right Angle for PCB

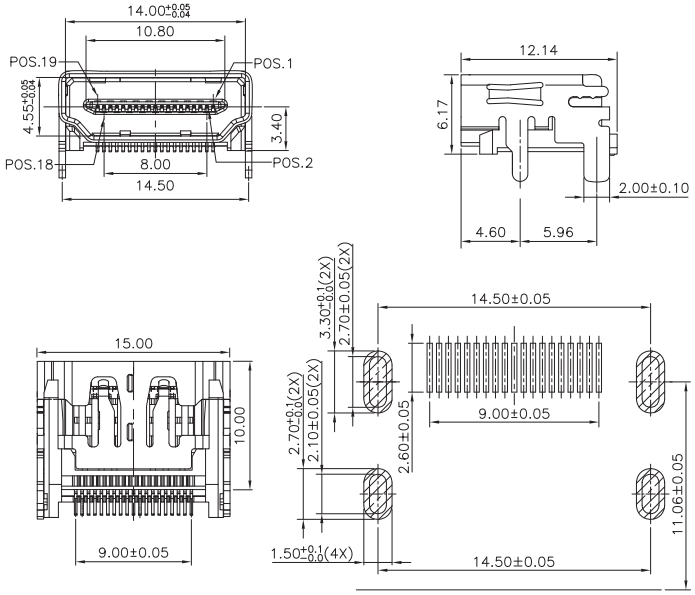

PART NO.
HI - 03 R 19 F K xx A2 B x - M
1 2 3 4 5 6 7 8 9 10

1. Processing Type: 03 SMT
2. Insertion Type: R: Right Angle
3. No. of Contact: 19 Positions
4. Contact Type: F: Female Receptacle
5. Insulator Color: K: Black
6. Contact Plating:
   01: Flash Gold
   15: 15u" Selective Gold
   30: 30u" Selective Gold
7. Metal Shell Construction:
   A: with Top Springs and 4xThrough Hole Support Pins
   A2: with Top and Side Springs and 4xThrough Hole Support Pins
8. Shell Material(Suffix No. 1):
   Blank: Phosphorous Bronze
   B: Brass
   S: SPCC
9. Suffix No. 2: Blank: without Kapton Mylar Tape
   M: with Kapton Mylar Tape
10. Contact Pins: Insert Molded Type

19P Socket, SMT, Right Angle with Top Flange for PCB

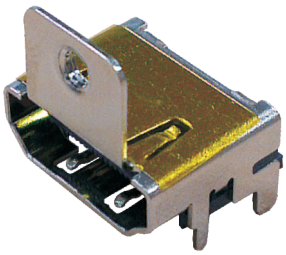

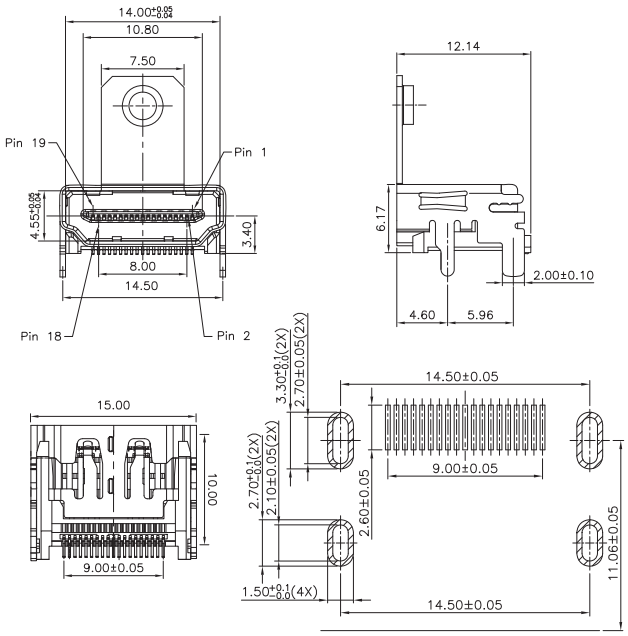

PART NO.
HIS03R - 19 F K xx SX M
1 2 3 4 5 6

1. No. of Contact: 19 Positions
2. Contact Type: F: Female Receptacle
3. Insulator Color: K: Black, Material LCP
4. Contact Plating:
   01: Flash Gold
   15: 15u" Selective Gold
   30: 30u" Selective Gold
5. Shell Construction
   S3: with Flange Height 9.975mm and
   Top Spring, Shell Pin Through Hole Type
   S2: with Flange Height 7.975mm and
   Top Spring, Shell Pin Through Hole Type
6. Contact Pins: Insert Molded Type

19P Socket, SMT , Veritcal with Side Flanges for PCB

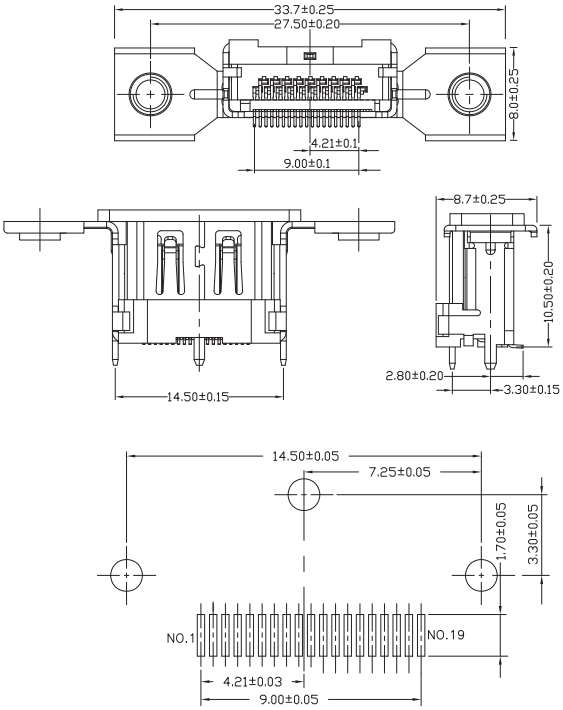

PART NO.
HIS2 - 19 F 03 02 K xx B - 2 R
1 2 3 4 5 6 7 8

1. No. of Contact: 19 Positions
2. Contact Type: F: Female Receptacle
3. Processing Type: 03: SMT
4. Connecting Direction: 02: Vertical/Top Entry
5. Insulator Color: K: Black
6. Contact Plating:
   01: Flash Gold
   30: 30u" Selective Gold
7. B: with Dust Cover
   Blank: without Dust Cover
8. Package: R: Tape & Reel

19P Socket, Through Hole, Right Angle with Top Flange for PCB

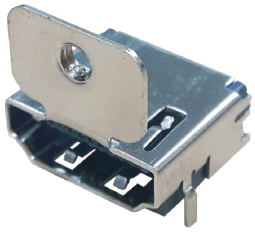

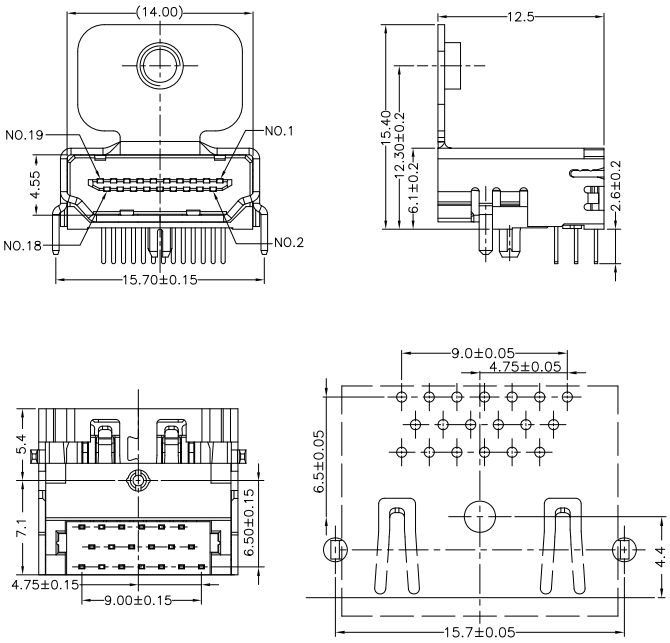

PART NO.
HIS - 19 F 01 01 K 15 A 3
1 2 3 4 5 6 7 8

1. No. of Contact: 19 Positions
2. Contact Type: F: Female Receptacle
3. Processing Type: 01: Thru-Hole Type
4. Connecting Direction: 01: Right Angle(Side Entry)
5. Insulator Color: K: Black
6. Contact Plating:
   01: Flash Gold
   30: 30u" Selective Gold
7. Shell Type:
   A: With Top Spring & 4 x Thru-Hole Support Pins
8. 3: 3 Rows Pins

19P Socket, Double Deck, Through Hole, Right Angle for PCB

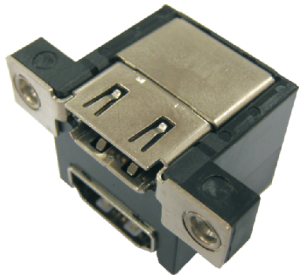

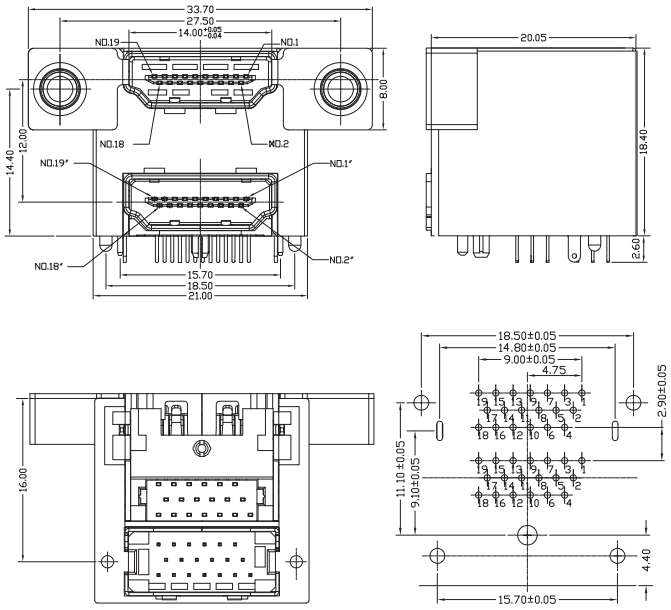

PART NO.
HIS2 - 19 F X2 01 K 30 A
1 2 3 4 5 6 7

1. No. of Contact: 19 Positions
2. Contact Type: F: Female Receptacle
3. X2 Double Deck
4. Processing Type: 01: Through Hole & Right Angle
5. Insulator Color: K: Black
6. Contact Plating:
   15: 15u" Gold over Nickel
   30: 30u" Gold over Nickel
7. A: with 4x T/H Support Pins & with Top Spring

19P Plug with Solder Pad for Wire Solder

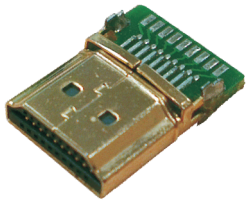

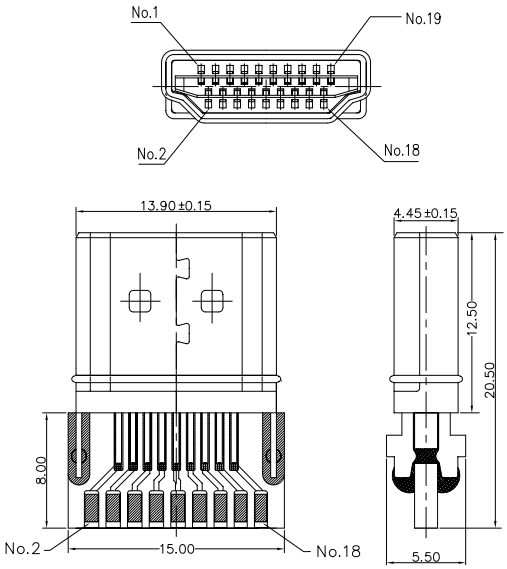

PART NO.
HI - 19 M 02 B K xx x
1 2 3 4 5 6 7

1. No. of Contact: 19 Positions
2. Contact Type:
   M: Male Plug
3. Processing Type:
   01: Direct Solder Port
   02: Straddle Board Solder
4. With Solder PCB or not
   Blank: without PCB
   B: Soldered with PCB
5. Insulator Color:
   K: Black
6. Contact Plating:
   01: Flash Gold
   15: 15u" Selective Gold
   30: 30u" Selective Gold
7. Shell Plating:
   Blank: Nickel
   G: Flash Gold
   G2: 3u" Min. Gold
   G3: 15u" Min. Gold

19P Socket, SMT, Right Angle for PCB

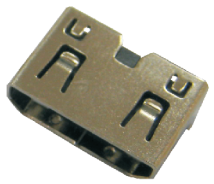

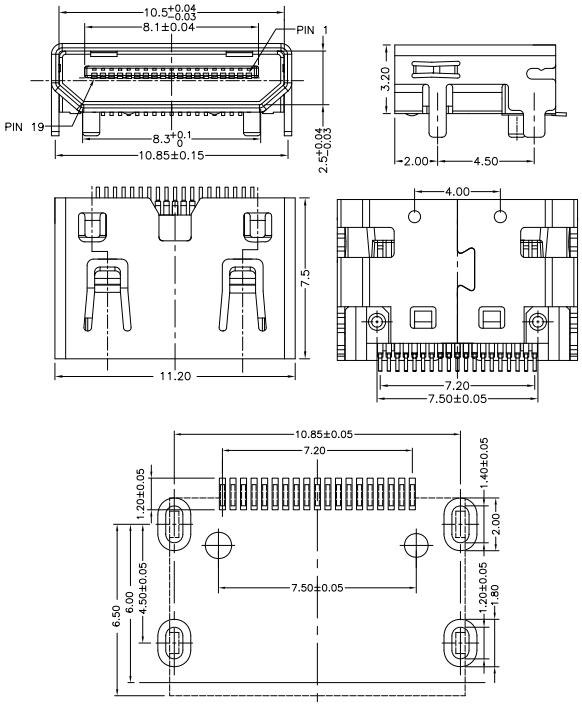

PART NO.
MHI 03 R - 19 F K 30 A 1
1 2 3 4 5 6 7 8

1. 03: SMT Type
2. R: Right Angle
3. No. of Contacts: 19 Positions
4. Contact Type: F: Female Receptacle
5. Color of Housing: K: Black Material LCP
6. Plating on Contact Pins:
   Material: Phosphorous Bronze
   01: Flash Gold over 30u" Nickel underplating
   15: 15u" Gold in Front Contact and Gold Flash in Solder Area
   30: 30u" Gold in Front Contact and Gold Flash in Solder Area
7. Metal Board Lock Type: A or B
8. Locating Posts: 0: Without
   1: With

19P Plug with Solder Pad for Wire Solder and Molding

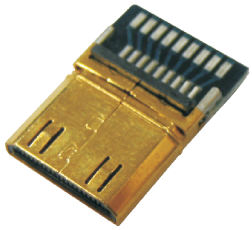

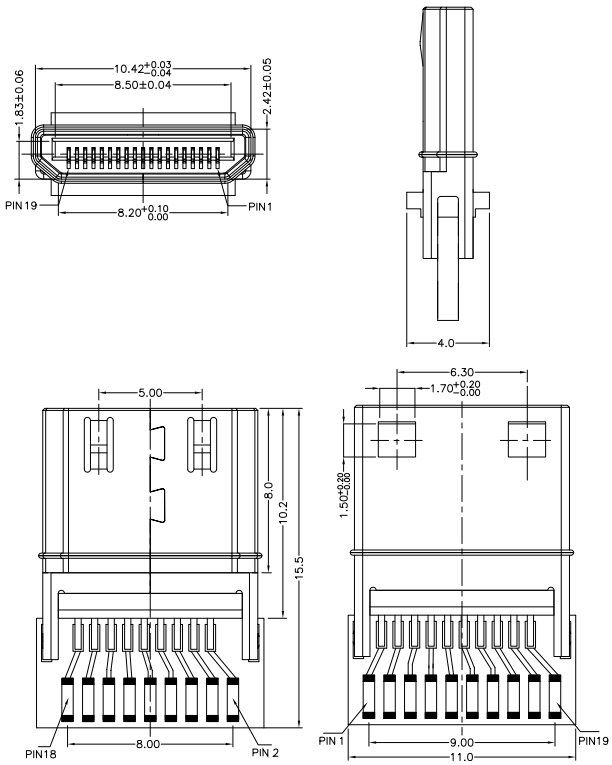

PART NO.
MHI 11 - 19 M K 30 G
1 2 3 4 5 6

1. 11: Solder Type for Wire Solder
2. No. of Contact: 19 Positions
3. Contact Type: F: Female Receptacle
4. Color of Housing:
   K: Black Material LCP
5. Plating on Contact Pins:
   Material: Phosphorous Bronze
   01: Flash Gold over 30u" Nickel underplating
   15: 15u" Gold in Front Contacts and Gold Flash in Solder Area
   30: 30u" Gold in Front Contacts and Gold Flash in Solder Area
6. Plating on Shell:
   N: Nickel
   G: Flash Gold

19P Socket, SMT, Right Angle, SMT+DIP Pins above PCB

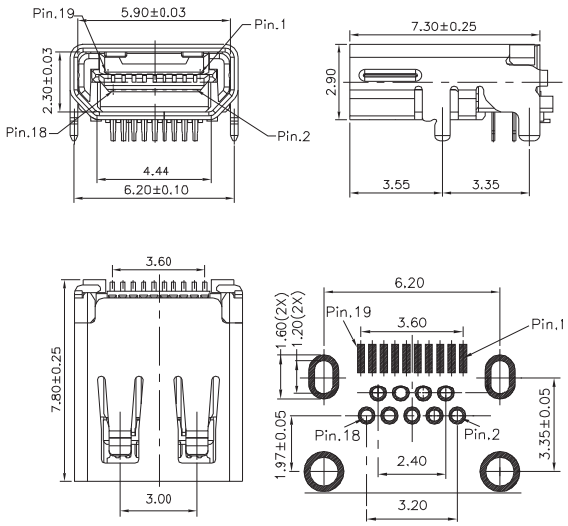

PART NO.
MMHI03RT - 19 F X XX J R
1 2 3 4 5 6 7

1. Series No. HDMI Connector, Type D, SMT Solder Tails, DIP Shell Pins
2. No. of Contact: 19 Positions
3. Contact Type: F: Female Receptacle
4. Color Codes: K: Black W: Natural
5. Contact Plating:
   01: Gold Flash Plated over All, 50u" Nickel under-Plating,
   15: 15u" Gold on Contact Area, Gold Flash on Solder Area
6. Shell Plating: J: Nickel
7. The Package no: R: Tape Reel Package

19P Plug with Metal Shell for Cable Molding

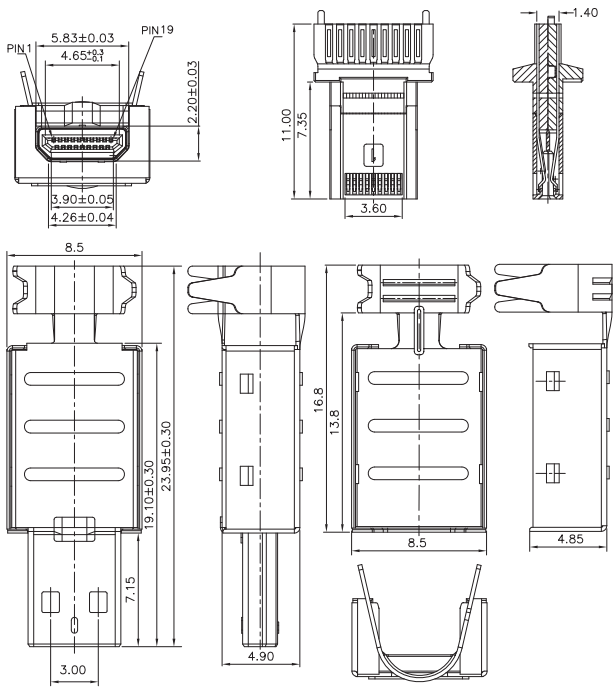

PART NO.
MMHI 11 - 19 M K 30 G
1 2 3 4 5 6

1. 11: Solder Type for Wire
2. No. of Contact: 19: 19 Positions
3. Contact Type: M: Male Plug
4. Color of Housing: K: Black Material LCP
5. Plating on Contact Pins:
   Material: Phosphorous Bronze
   01: Gold Flash over 30u" Nickel underplating
   15: 15u" Gold in Front Contacts and Gold Flash in Solder Area
   30: 30u" Gold in Front Contacts and Gold Flash in Solder Area
6. Plating on Shell:
   N: Nickel
   G: Flash Gold

1394 6P Socket, SMT, Right Angle for PCB

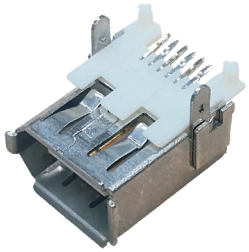

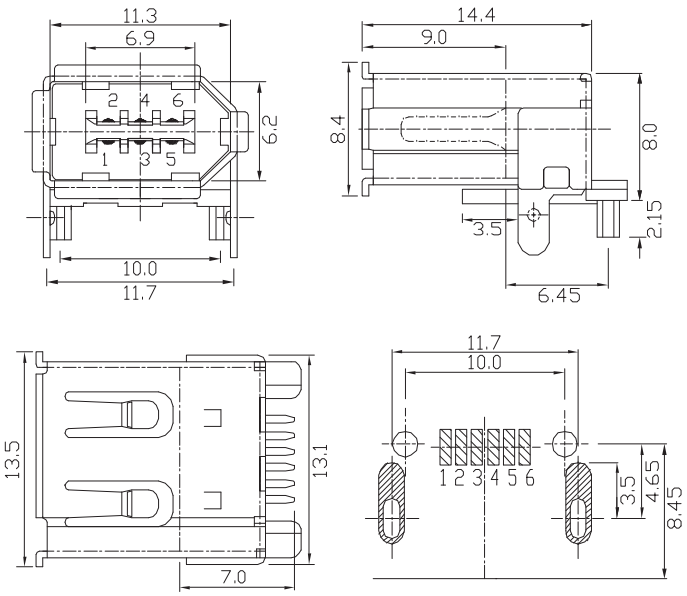

PART NO.
FWR03 B - 6 F W 30 J - 2
1 2 3 4 5 6

1. Back Shield
2. No. of Contacts: 6 Positions
3. Contact Type:
   F: Female Receptacle
4. Insulator Color:
   K: Black
   W: White
5. Contact Plating: 30u" Gold
6. Shell Plating:
   J: Nickel
   C: Bright Tin

1394 6P Socket, Through Hole, Upright for PCB

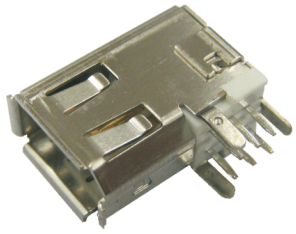

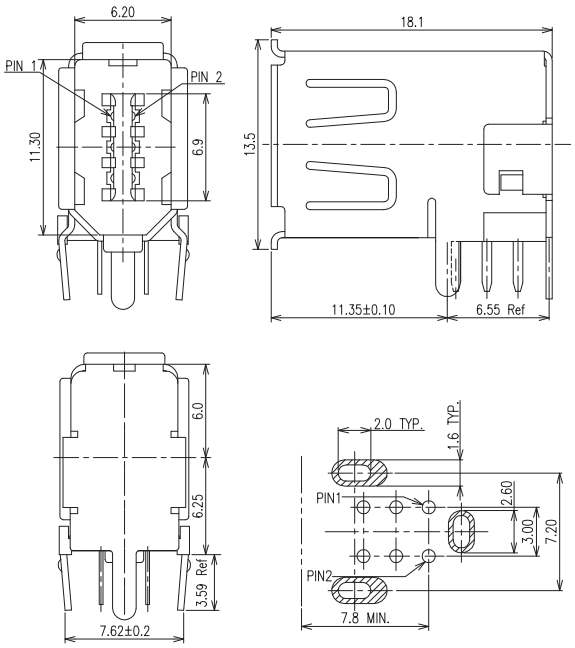

PART NO.
FWR04 - 6 F W 30 J
1 2 3 4 5

1. No. of Contact: 6 Positions
2. Contact Type:
   F: Female Receptacle
3. Insulator Color:
   K: Black
   W: White
4. Contact Plating:
   30: 30u" Gold
5. Shell Plating:
   J: Nickel
   C: Bright Tin

1394 6P Socket, Through Hole, Right Angle for PCB

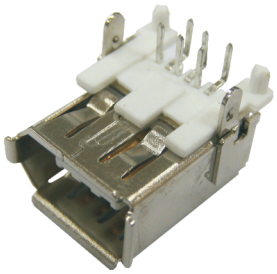

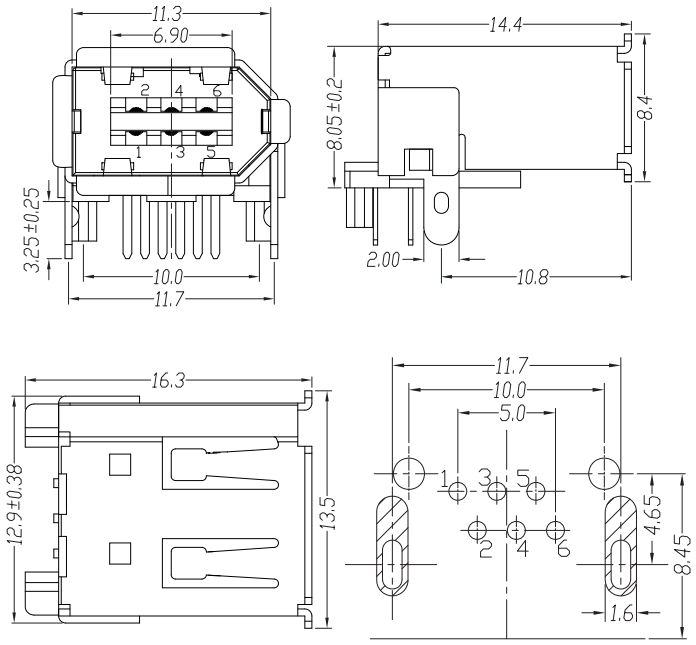

PART NO.
FWR01B - 6 F X 30 J
1 2 3 4 5

1. No. of Contact: 6 Positions
2. Contact Type:
   F: Female Receptacle
3. Insulator Color:
   W: White
   K: Black
4. Contact Plating:
   30: 30u” Gold
5. Shell Plating:
   J: Nickel

Panstrong Company Ltd.
貝 強 實 業 有 限 公 司

22F-8, No.99, Sec. 1, Xintai 5th Rd., Xizhi Dist.,
New Taipei City 221, Taiwan(R.O.C.)
Tel No.:886 2 26971001
Fax No.:886 2 26971727
Web Site:www.panstrong.com.tw
E-mail:info@panstrong.com.tw